RIDGID®

OPERATOR'S MANUAL

10 in. TILE SAW
R4090

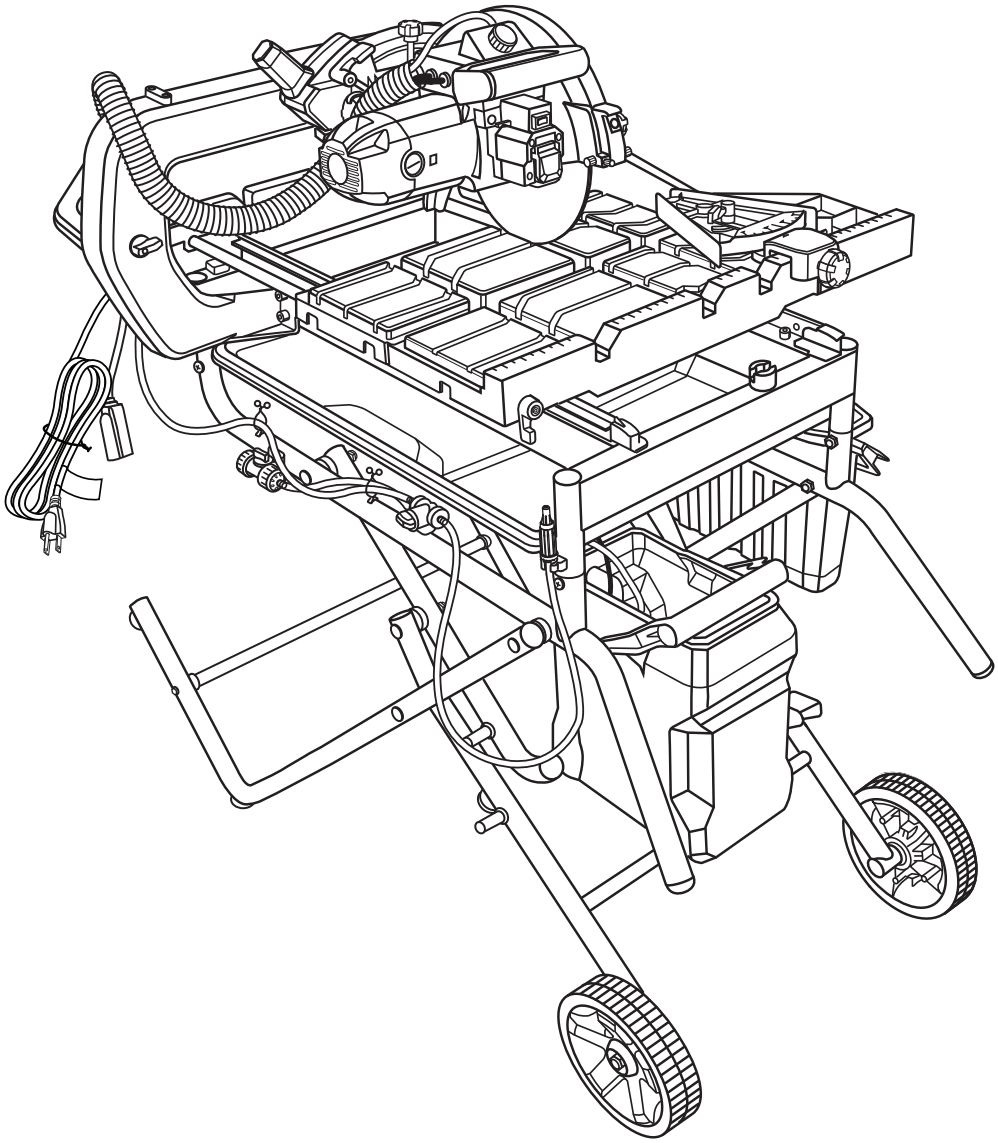

Your tile saw has been engineered and manufactured to our high standards for dependability, ease of operation, and operator safety. When properly cared for, it will give you years of rugged, trouble-free performance.

WARNING:
To reduce the risk of injury, the user must read and understand the operator's manual before using this product.

Thank you for buying a RIDGID® product.

SAVE THIS MANUAL FOR FUTURE REFERENCE

TABLE OF CONTENTS

- Introduction 2
- General Safety Rules 3-4
- Specific Safety Rules 5
- Symbols 6
- Electrical 7-8
- Features 9-10
- Tools Needed 10
- Loose Parts 11
- Assembly 12-21
- Operation 22-28
- Adjustments 29-30
- Maintenance 31-32
- Warranty 33
- Parts Ordering and Service ..... Back page

INTRODUCTION

This product has many features for making its use more pleasant and enjoyable. Safety, performance, and dependability have been given top priority in the design of this product making it easy to maintain and operate.

GENERAL SAFETY RULES

WARNING:
Read and understand all instructions. Failure to follow all instructions listed below, may result in electric shock, fire and/or serious personal injury.

READ ALL INSTRUCTIONS

- **KNOW YOUR POWER TOOL.** Read the operator's manual carefully. Learn the saw's applications and limitations as well as the specific potential hazards related to this tool.
- **GUARD AGAINST ELECTRICAL SHOCK BY PREVENTING BODY CONTACT WITH GROUNDED SURFACES.** For example, pipes, radiators, ranges, refrigerator enclosures.
- **KEEP GUARDS IN PLACE** and in good working order.
- **REMOVE ADJUSTING KEYS AND WRENCHES.** Form habit of checking to see that keys and adjusting wrenches are removed from tool before turning it on.
- **KEEP WORK AREA CLEAN.** Cluttered areas and benches invite accidents. **DO NOT** leave tools or pieces of tile on the saw while it is in operation.
- **DO NOT USE IN DANGEROUS ENVIRONMENTS.** Do not use power tools in damp or wet locations or expose to rain. Keep the work area well lit.
- **KEEP CHILDREN AND VISITORS AWAY.** All visitors should wear safety glasses and be kept a safe distance from work area. Do not let visitors contact tool or extension cord while operating.
- **MAKE WORKSHOP CHILDPROOF** with padlocks and master switches, or by removing starter keys.
- **DON'T FORCE TOOL.** It will do the job better and safer at the feed rate for which it was designed.
- **USE RIGHT TOOL.** Don't force the tool or attachment to do a job it was not designed for. Don't use it for a purpose not intended.
- **USE THE PROPER EXTENSION CORD.** Make sure your extension cord is in good condition. Use only a cord heavy enough to carry the current your product will draw. An undersized cord will cause a drop in line voltage resulting in loss of power and overheating. A wire gauge size (A.W.G.) of at least **14** is recommended for an extension cord 25 feet or less in length. If in doubt, use the next heavier gauge. The smaller the gauge number, the heavier the cord.
- **DRESS PROPERLY.** Do not wear loose clothing, gloves, neckties, or jewelry. They can get caught and draw you into moving parts. Rubber gloves and nonskid footwear (rubber soled boots) are recommended when working outdoors. Also wear protective hair covering to contain long hair.
- **ALWAYS WEAR SAFETY GLASSES WITH SIDE SHIELDS.** Everyday eyeglasses have only impact-resistant lenses, they are **NOT** safety glasses.
- **SECURE WORK.** Use clamps or a vise to hold work when practical, it is safer than using your hand and frees both hands to operate the tool.
- **DON'T OVERREACH.** Keep proper footing and balance at all times.
- **MAINTAIN TOOLS WITH CARE.** Keep tools sharp and clean for better and safer performance. Follow instructions for lubricating and changing accessories.
- **DISCONNECT TOOLS.** When not in use, before servicing, or when changing attachments, wheels, bits, cutters, etc., all tools should be disconnected.
- **AVOID ACCIDENTAL STARTING.** Be sure switch is off when plugging in any tool.
- **USE RECOMMENDED ACCESSORIES.** Consult the operator's manual for recommended accessories. The use of improper accessories may risk injury.
- **NEVER STAND ON TOOL.** Serious injury could occur if the tool is tipped or if the cutting tool is unintentionally contacted.
- **CHECK DAMAGED PARTS.** Before further use of the tool, a guard or other part that is damaged should be carefully checked to determine that it will operate properly and perform its intended function. Check for alignment of moving parts, binding of moving parts, breakage of parts, mounting and any other conditions that may affect its operation. A guard or other part that is damaged must be properly repaired or replaced by an authorized service center to avoid risk of personal injury.
- **USE THE RIGHT DIRECTION OF FEED.** Feed work into a wheel or cutter against the direction of rotation of wheel or cutter only.
- **NEVER LEAVE TOOL RUNNING UNATTENDED. TURN THE POWER OFF.** Don't leave tool until it comes to a complete stop.
- **PROTECT YOUR LUNGS.** Wear a face or dust mask if the cutting operation is dusty.
- **PROTECT YOUR HEARING.** Wear hearing protection during extended periods of operation.
- **DO NOT ABUSE CORD.** Never yank cord to disconnect from receptacle. Keep cord away from heat, oil, and sharp edges.
- **ALWAYS USE AN OUTDOOR EXTENSION CORD MARKED "W-A" OR "W".** These cords are rated for outdoor use and reduce the risk of electric shock.
- **ALWAYS KEEP THE WHEEL GUARD IN PLACE** and in working order.

GENERAL SAFETY RULES

- **KEEP HANDS AWAY FROM CUTTING AREA.** Keep hands away from wheels. Do not reach underneath work or around or over the wheel while wheel is rotating. Do not attempt to remove cut material when wheel is moving.
- **WHEEL COASTS AFTER BEING TURNED OFF.**
- **NEVER USE IN AN EXPLOSIVE ATMOSPHERE.** Normal sparking of the motor could ignite fumes.
- **INSPECT TOOL CORDS PERIODICALLY.** If damaged, have repaired by a qualified service technician at an authorized service facility. The conductor with insulation having an outer surface that is green with or without yellow stripes is the equipment-grounding conductor. If repair or replacement of the electric cord or plug is necessary, do not connect the equipment-grounding conductor to a live terminal. Repair or replace a damaged or worn cord immediately. Stay constantly aware of cord location and keep it well away from the rotating wheel.
- **INSPECT EXTENSION CORDS PERIODICALLY** and replace if damaged.
- **GROUND ALL TOOLS.** If tool is equipped with three-prong plug, it should be plugged into a three-hole electrical receptacle.
- **ONLY POWER THE TOOL WITH A GFCI (GROUND FAULT CIRCUIT INTERRUPTOR) PROTECTED OUTLET.**
- **CHECK WITH A QUALIFIED ELECTRICIAN** or service personnel if the grounding instructions are not completely understood or if in doubt as to whether the tool is properly grounded.
- **USE ONLY CORRECT ELECTRICAL DEVICES:** 3-wire extension cords that have 3-prong grounding plugs and 3-pole receptacles that accept the tool's plug.
- **DO NOT MODIFY** the plug provided. If it will not fit the outlet, have the proper outlet installed by a qualified electrician.
- **KEEP TOOL DRY, CLEAN, AND FREE FROM OIL AND GREASE.** Always use a clean cloth when cleaning. Never use brake fluids, gasoline, petroleum-based products, or any solvents to clean tool.
- **STAY ALERT AND EXERCISE CONTROL.** Watch what you are doing and use common sense. Do not operate tool when you are tired. Do not rush.
- **DO NOT USE TOOL IF SWITCH DOES NOT TURN IT ON AND OFF.** Have defective switches replaced by an authorized service center.
- **USE ONLY CORRECT WHEELS. Do not** use wheels with incorrect size holes. Never use washers or arbor nuts that are defective or incorrect. The maximum wheel capacity of your saw is 10 in. (254 mm).
- **BEFORE MAKING A CUT, BE SURE ALL ADJUSTMENTS ARE SECURE.**
- **NEVER TOUCH WHEEL** or other moving parts during use.
- **NEVER START A TOOL WHEN ANY ROTATING COMPONENT IS IN CONTACT WITH THE WORKPIECE.**
- **DO NOT OPERATE A TOOL WHILE UNDER THE INFLUENCE OF DRUGS, ALCOHOL, OR ANY MEDICATION.**
- **WHEN SERVICING** use only identical replacement parts. Use of any other parts may create a hazard or cause product damage.
- **USE ONLY RECOMMENDED ACCESSORIES** listed in this manual or addendums. Use of accessories that are not listed may cause the risk of personal injury. Instructions for safe use of accessories are included with the accessory.
- **DOUBLE CHECK ALL SETUPS.** Make sure wheel is tight and not making contact with saw or workpiece before connecting to power supply.

SPECIFIC SAFETY RULES

- **SECURE WORK** firmly against the miter guide or fence.
- **NEVER** stand or have any part of your body in line with the path of the wheel.
- **NEVER** attempt to free a stalled wheel without first turning the saw **OFF** and disconnecting the saw from the power source.
- **IF THE POWER SUPPLY CORD IS DAMAGED,** it must be replaced only by the manufacturer or by an authorized service center to avoid risk.
- **AVOID AWKWARD OPERATIONS AND HAND POSITIONS** where a sudden slip could cause your hand to move into the cutting tool.
- **MAKE SURE THE WORK AREA HAS AMPLE LIGHTING** to see the work and that no obstructions will interfere with safe operation **BEFORE** performing any work using the saw.
- **ALWAYS TURN OFF SAW** before disconnecting it, to avoid accidental starting when reconnecting to power supply.
- **THIS TOOL** should have the following markings:
  a) Wear eye, hearing, and breathing protection.
  b) Use wheel guard for every operation for which it can be used.
  c) Disconnect saw before servicing, when changing cutting wheels, and cleaning.
  d) Use tool only with smooth edge cutting wheels free of openings, grooves, and teeth.
  e) Replace damaged cutting wheel before operating.
  f) Do not fill water bath above water fill line.
- **SAVE THESE INSTRUCTIONS.** Refer to them frequently and use to instruct other users. If you loan someone this tool, loan them these instructions too.

⚠ WARNING:

Some dust created by power sanding, sawing, grinding, drilling, and other construction activities contains chemicals known to cause cancer, birth defects or other reproductive harm. Some examples of these chemicals are:

- lead from lead-based paints,
- crystalline silica from bricks and cement and other masonry products, and
- arsenic and chromium from chemically-treated lumber.

Your risk from these exposures varies, depending on how often you do this type of work. To reduce your exposure to these chemicals: work in a well ventilated area, and work with approved safety equipment, such as those dust masks that are specially designed to filter out microscopic particles.

SYMBOLS

The following signal words and meanings are intended to explain the levels of risk associated with this product.

SYMBOL	SIGNAL	MEANING
⚠	**DANGER:**	Indicates an imminently hazardous situation, which, if not avoided, will result in death or serious injury.
⚠	**WARNING:**	Indicates a potentially hazardous situation, which, if not avoided, could result in death or serious injury.
⚠	**CAUTION:**	Indicates a potentially hazardous situation, which, if not avoided, may result in minor or moderate injury.
	CAUTION:	(Without Safety Alert Symbol) Indicates a situation that may result in property damage.

Some of the following symbols may be used on this tool. Please study them and learn their meaning. Proper interpretation of these symbols will allow you to operate the tool better and safer.

SYMBOL	NAME	DESIGNATION/EXPLANATION
⚠	Safety Alert	Indicates a potential personal injury hazard.
	Read Operator's Manual	To reduce the risk of injury, user must read and understand operator's manual before using this product.
	Eye, Ear, & Breathing Protection	Always wear eye protection with side shields marked to comply with ANSI Z87.1 along with hearing and breathing protection.
	Wet Conditions Alert	Do not expose to rain or use in damp locations.
	No Hands	Failure to keep your hands away from the wheel will result in serious personal injury.
ϟ	Electrocution	Failure to properly ground can result in electrocution.
V	Volts	Voltage
A	Amperes	Current
Hz	Hertz	Frequency (cycles per second)
min	Minutes	Time
∿	Alternating Current	Type of current
n_o	No Load Speed	Rotational speed, at no load
.../min	Per Minute	Revolutions, strokes, surface speed, orbits etc., per minute

ELECTRICAL

EXTENSION CORDS

Use only 3-wire extension cords that have 3-prong grounding plugs and 3-pole receptacles that accept the tool's plug. When using a power tool at a considerable distance from the power source, use an extension cord heavy enough to carry the current that the tool will draw. An undersized extension cord will cause a drop in line voltage, resulting in a loss of power and causing the motor to overheat. Use the chart provided below to determine the minimum wire size required in an extension cord. Only round jacketed cords listed by Underwriter's Laboratories (UL) should be used.

**Ampere rating (on tool data plate)

	0-2.0	2.1-3.4	3.5-5.0	5.1-7.0	7.1-12.0	12.1-16.0
Cord Length			**Wire Size (A.W.G.)**			
25'	16	16	16	16	14	14
50'	16	16	16	14	14	12
100'	16	16	14	12	10	—

***Used on 12 gauge - 20 amp circuit.*
NOTE: AWG = American Wire Gauge

Always use an extension cord that is designed for outside use. This is indicated by the letters "W-A" or "W" on the cord's jacket.

Before using an extension cord, inspect it for loose or exposed wires and cut or worn insulation.

Use only extension cords that are intended for outdoor use. These extension cords are identified by a marking "Acceptable for use with outdoor appliances; store indoors while not in use". Use only extension cords having an electrical rating not less than the rating of the product. Do not use damaged extension cords. Examine extension cord before using and replace if damaged. Do not abuse extension cords and do not yank on any cord to disconnect. Keep cord away from heat and sharp edges. Always disconnect the extension cord from the receptacle before disconnecting the product from the extension cord.

WARNING:

Keep the extension cord clear of the working area. Position the cord so that it will not get caught on lumber, tools or other obstructions while you are working with a power tool. Failure to do so can result in serious personal injury.

WARNING:

Check extension cords before each use. If damaged replace immediately. Never use tool with a damaged cord since touching the damaged area could cause electrical shock resulting in serious injury.

ELECTRICAL CONNECTION

This tool is powered by a precision built electric motor. It should be connected to a **power supply that is 120 V, AC only (normal household current), 60 Hz.** Do not operate this tool on direct current (DC). A substantial voltage drop will cause a loss of power and the motor will overheat. If the saw does not operate when plugged into an outlet, double check the power supply.

SPEED AND WIRING

The no-load speed of this tool is approximately 4,000 rpm. This speed is not constant and decreases under a load or with lower voltage. For voltage, the wiring in a shop is as important as the motor's horsepower rating. A line intended only for lights cannot properly carry a power tool motor. Wire that is heavy enough for a short distance will be too light for a greater distance. A line that can support one power tool may not be able to support two or three tools.

GROUNDING INSTRUCTIONS

See Figure 1.

This tool must be grounded. In the event of a malfunction or breakdown, grounding provides a path of least resistance for electric current to reduce the risk of electric shock. This tool is equipped with an electric cord having an equipment-grounding conductor and a grounding plug. The plug must be plugged into a matching outlet that is properly installed and grounded in accordance with all local codes and ordinances.

Do not modify the plug provided. If it will not fit the outlet, have the proper outlet installed by a qualified electrician.

WARNING:

Improper installation of the grounding plug can result in a risk of electric shock. When repair or replacement of the cord is required, do not connect the grounding wire to either flat blade terminal. The wire with insulation having an outer surface that is green with or without yellow stripes is the grounding wire.

Check with a qualified electrician or service personnel if the grounding instructions are not completely understood, or if in doubt as to whether the tool is properly grounded.

Repair or replace a damaged or worn cord immediately.

This product is for use on a nominal 120 volt circuit and has a grounding plug similar to the plug illustrated in figure 1. Only connect the product to an outlet having the same configuration as the plug. Do not use an adapter with this product.

ELECTRICAL

Ground Fault Circuit Interrupter (GFCI) protection should be provided on the circuit(s) or outlet(s) to be used for the tile saw. Outlets are available having built-in GFCI protection and may be used for this measure of safety.

If the saw is used with an extension cord, ensure the connection of the tool's power cord and the extension cord are not on the ground.

If a protected outlet is not available, do not use the saw until an outlet can be changed or auxiliary protection can be obtained. These auxiliary protection devices are available at your local retailer.

POSITION OF THE TILE SAW

See Figure 2.

To avoid the possibility of the tool plug or outlet getting wet, position tile saw to one side of a wall-mounted outlet to prevent water from dripping onto the outlet or plug. The operator should arrange a "drip loop" in the cord connecting the saw to the outlet. The "drip loop" is that part of the cord below the level of the outlet, or the connector if an extension cord is used, to prevent water traveling along the cord and coming in contact with the outlet.

If the plug or outlet does get wet, DO NOT unplug the cord. Disconnect the fuse or circuit breaker that supplies power to the tool then unplug and examine for the presence of water in the outlet.

WARNING:
To reduce the risk of electrocution, keep all connections dry and off the ground. Do not touch the plug with wet hands.

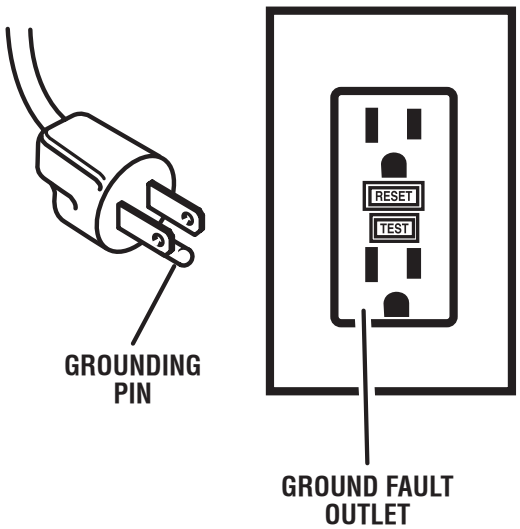

Fig. 1

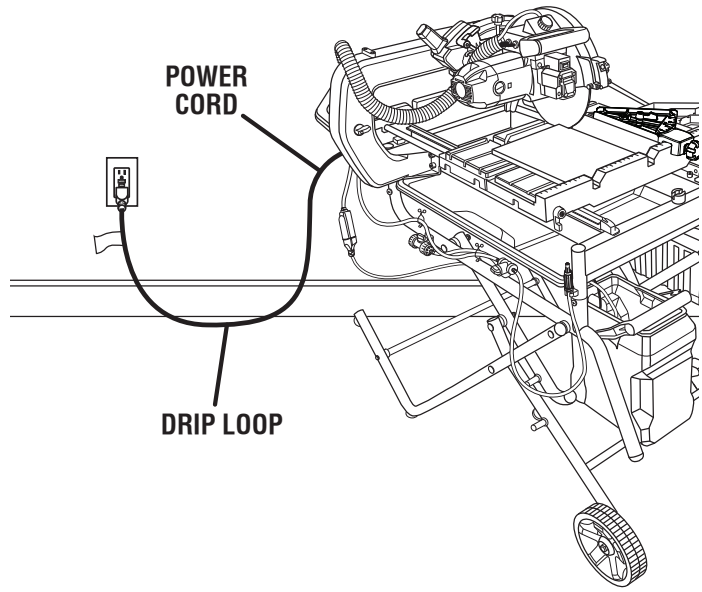

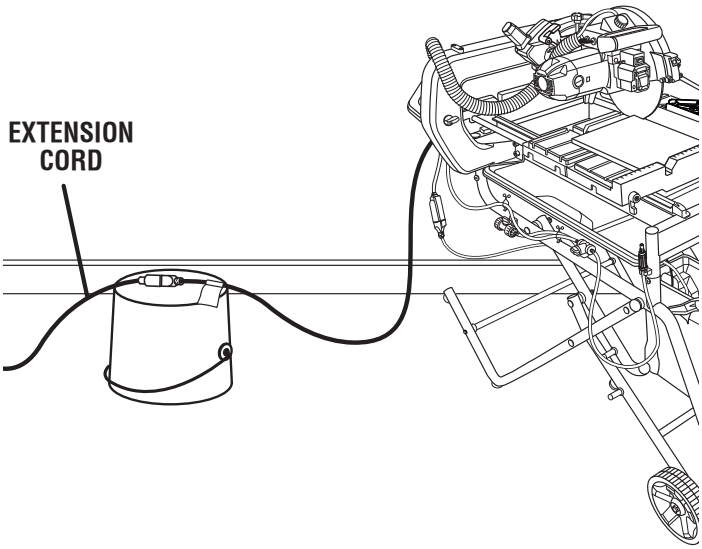

Fig. 2

FEATURES

PRODUCT SPECIFICATIONS

Wheel Diameter	10 in.
Wheel Arbor	5/8 in.
Throat Capacity	17 in.
Rip Capacity (tile size)	34 in.
Diagonal Capacity (tile size)	24 in.
Maximum Depth of Cut	3-3/4 in.
Rating	120 V~, 15 Amps, 60 Hz
No Load Speed	2,400 - 4,500 r/min. (RPM)

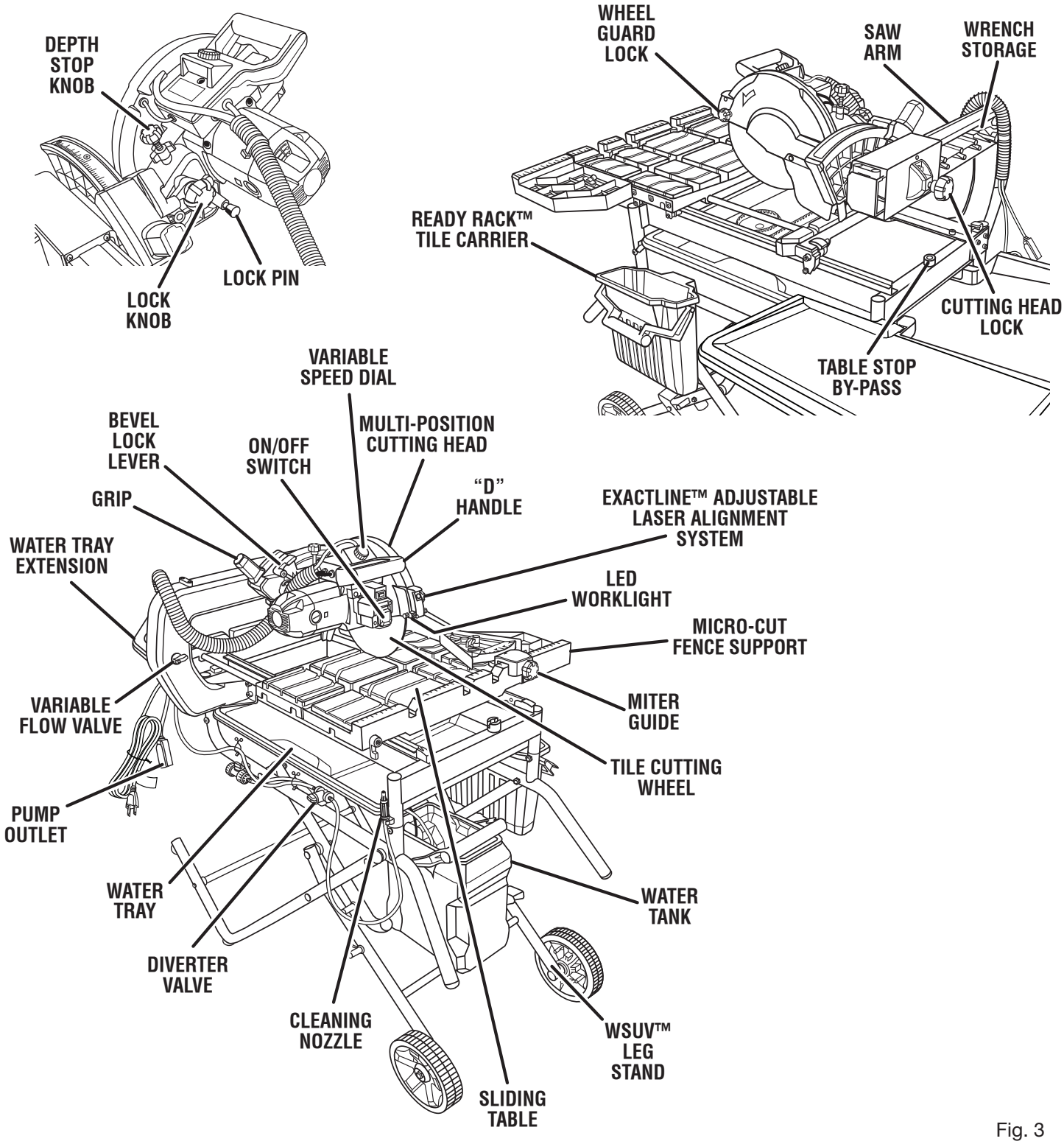

Fig. 3

FEATURES

KNOW YOUR TILE SAW

See Figure 3.

The safe use of this product requires an understanding of the information on the tool and in this operator's manual as well as a knowledge of the project you are attempting. Before use of this product, familiarize yourself with all operating features and safety rules.

10 in. TILE CUTTING WHEEL - A 10 in. tile cutting wheel is included with your saw.

WARNING:
Do not use wheels rated less than the speed of this tool. Failure to heed this warning could result in personal injury.

BEVEL LOCK LEVER - The bevel lock lever securely locks the saw head from 0º to 45º bevel angles.

CLEANING NOZZLE - Rinse away sediment and debris making clean up quick and easy using the cleaning nozzle.

DIVERTER VALVE - With the diverter valve turned to the left, water runs through the clear tube and onto the cutting wheel. Turn the diverter valve to the right and use the cleaning nozzle to wash debris from the saw.

ELECTRIC BRAKE - An electric brake has been provided to quickly stop wheel rotation after the switch is released.

EXACTLINE™ ADJUSTABLE LASER ALIGNMENT SYSTEM - For more accurate cuts, a laser guide is included with the tile saw. When used properly, the laser guide makes accurate, precision cutting simple and easy. Simply push the button to turn the laser on or off.

LED WORKLIGHT - The saw comes equipped with an LED worklight that lights the work area for more accurate cuts. The worklight turns on when the saw is plugged in.

MICRO-CUT FENCE SUPPORT - This fence support helps prevent tile from cracking.

MITER GUIDE - The easy-to-read indicator on the miter guide shows the exact angle for a miter cut with detents at 0°, 22.5°, and 45°.

MULTI-POSITION CUTTING HEAD - Increase cutting capacity by moving the cutting head left or right on the saw arm.

NEVER DRY VALVE - When a garden hose is connected to the valve, the never dry valve acts like a float to maintain the water level in the water tank.

ON/OFF SWITCH - This saw has an easy access power switch located on the motor housing.

READY RACK™ TILE CARRIER - Provides a convenient carrier to stack and dry tiles.

SEDIMENT SEPARATION SYSTEM™ - This system separates sediment and debris filtering the water before it is recycled into the water tank.

SLIDING TABLE - The sliding table allows the user to slide the workpiece into the cutting wheel for accurate cuts.

SUBMERSIBLE PUMP - The submersible pump (not shown) provides water to the cutting wheel or cleaning nozzle.

VARIABLE FLOW VALVE - Adjusts the flow of water to the cutting wheel.

VARIABLE SPEED DIAL - The variable speed dial is conveniently located on the top of the motor housing and can be used to adjust no load speed between 2,400 RPM and 4,500 RPM.

WATER TANK - Using the universal pump and water tank together keeps water circulating to the tool eliminating the need for frequent water changes.

WATER TRAY EXTENSIONS - When cutting larger tile, the extensions keeps work area cleaner and drier.

WRENCH STORAGE - The wheel wrench is conveniently stored on the back of the saw arm.

WSUV™ WET SAW UTILITY VEHICLE - Attached to the saw base, the leg stand opens and closes with ease making transportation simple.

TOOLS NEEDED

The following tools (not included or drawn to scale) are needed for assembly and alignment:

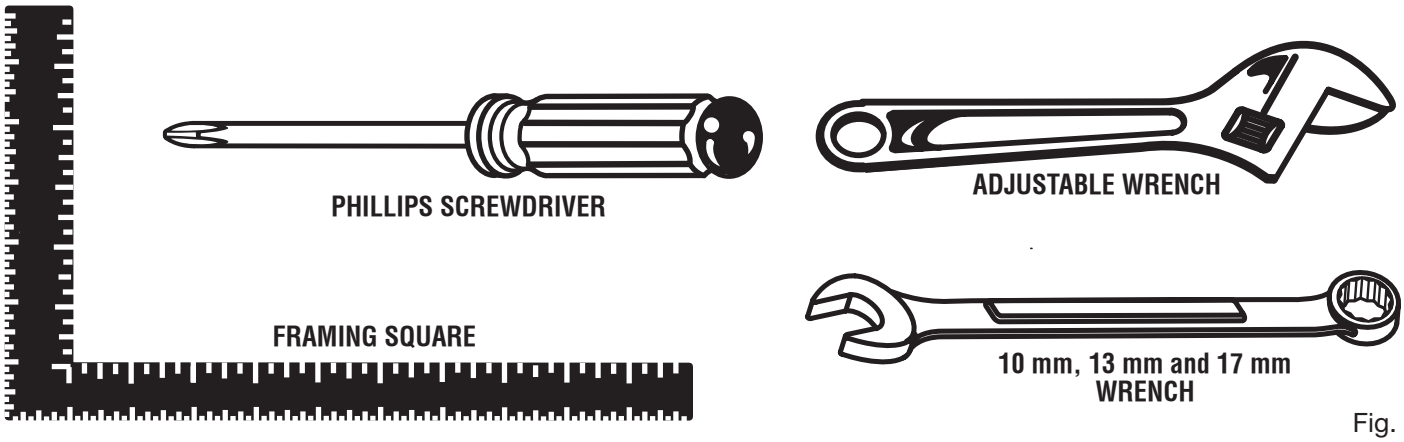

Fig. 4

LOOSE PARTS

The following items are included with your tile saw:

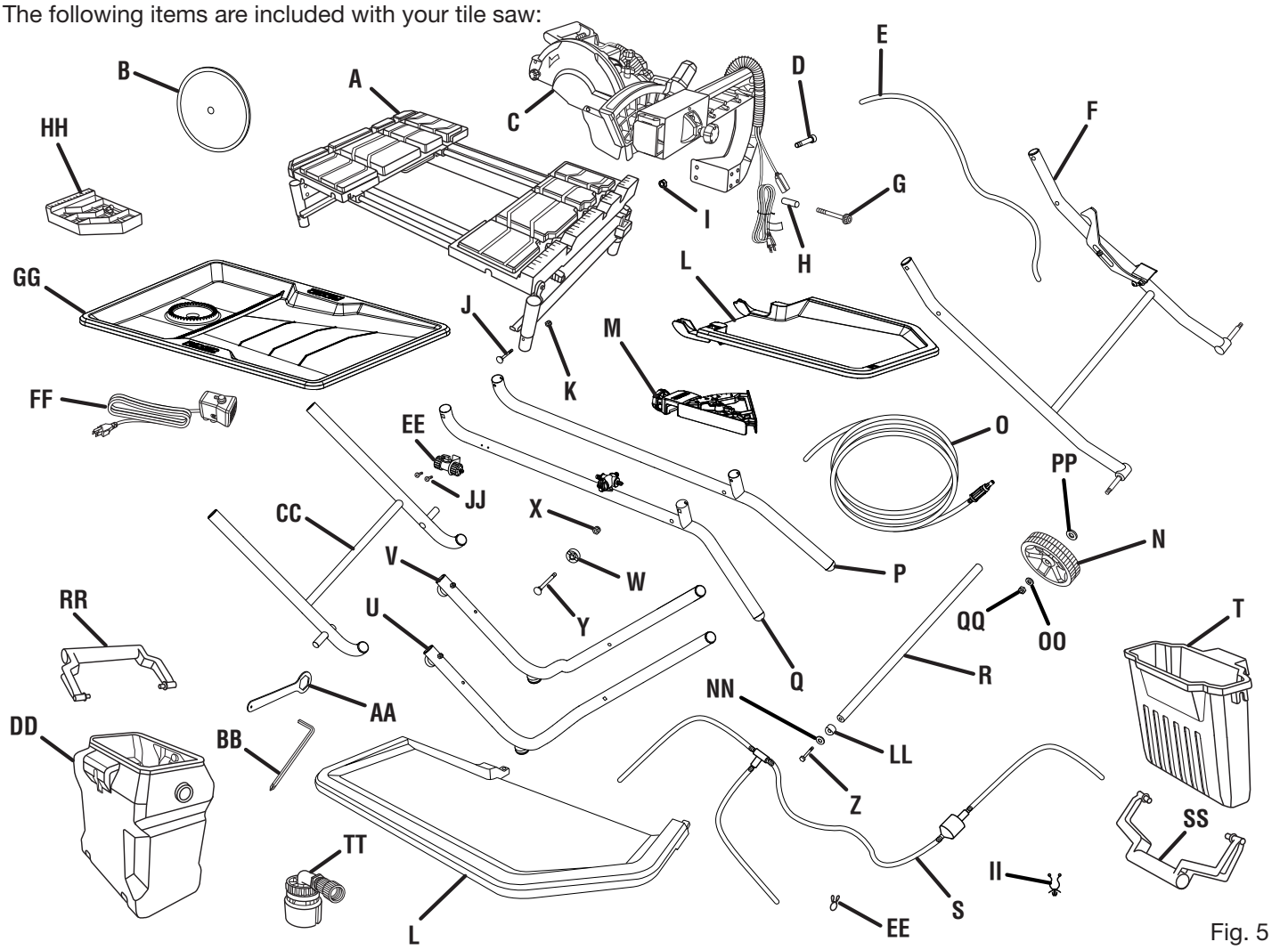

Fig. 5

A -	Water tray frame assembly	1
B -	Tile cutting wheel	1
C -	Motor head assembly	1
D -	Cap bolt (short)	2
E -	Long clear tube	1
F -	Inner leg assembly	1
G -	Cap bolt (long)	4
H -	Sleeve	4
I -	Hex nut	2
J -	Short cap screw	4
K -	Lock nut	4
L -	Water tray extensions	2
M -	Miter guide	1
N -	Wheel	2
O -	Long clear tube with cleaning nozzle	1
P -	Right upper tube	1
Q -	Left upper tube	1
R -	Lower brace	1
S -	Long tube assembly (T-connector)	1
T -	Ready Rack™ Tile Carrier	1
U -	Left outer tube	1
V -	Right outer tube	1
W -	Spacer	8
X -	Lock nut (small)	8
Y -	Carriage bolt	8
Z -	Hex head bolt	2
AA -	Wheel wrench	1
BB -	Hex key, 2.5 mm, 6 mm, 8 mm	3
CC -	Center brace	1
DD -	Water tank	1
EE -	Water supply valve and mounting bracket	1
FF -	Water pump	1
GG -	Water tray	1
HH -	Sliding table extension	1
II -	Hose clamps (plastic)	2
JJ -	Screws	2
KK -	Nuts	2
LL -	Spacer (curved)	2
MM -	Water filter	1
NN -	Flat washer (small)	2
OO -	Flat washer (medium)	2
PP -	Flat washer (large)	2
QQ -	Lock nut (large)	2
RR -	Handle (short)	1
SS -	Handle (long)	1
TT -	Never Dry Valve	1
UU -	Hose clamps (metal)	2

ASSEMBLY

UNPACKING

See Figure 5.

This product requires assembly.

- Carefully lift the saw from the carton and place on a level work surface.

WARNING:
Do not use this product if any parts on the Loose Parts List are already assembled to your product when you unpack it. Parts on this list are not assembled to the product by the manufacturer and require customer installation. Use of a product that may have been improperly assembled could result in serious personal injury.

- Inspect the tool carefully to make sure no breakage or damage occurred during shipping.
- Do not discard the packing material until you have carefully inspected and satisfactorily operated the tool.
- The saw is factory set for accurate cutting. After assembling it, check for accuracy. If shipping has influenced the settings, refer to specific procedures explained in this manual.
- If any parts are damaged or missing, please call 1-866-539-1710 for assistance.

WARNING:
If any parts are damaged or missing do not operate this tool until the parts are replaced. Use of this product with damaged or missing parts could result in serious personal injury.

WARNING:
Do not attempt to modify this tool or create accessories not recommended for use with this tool. Any such alteration or modification is misuse and could result in a hazardous condition leading to possible serious personal injury.

WARNING:
Do not connect to power supply until assembly is complete. Failure to comply could result in accidental starting and possible serious personal injury.

ATTACHING HANDLES TO THE READY RACK™ TILE CARRIER AND WATER TANK

See Figure 6.

The long handle should be attached to the Ready Rack™ Tile Carrier while the shorter handle is used on the water tank. On both sides of the Ready Rack™ tile carrier and the water tank are slots to be used for handle installation.

- Place the handle below the slot then pull up on the handle until it slides into the slot.
- Repeat with the water tank.

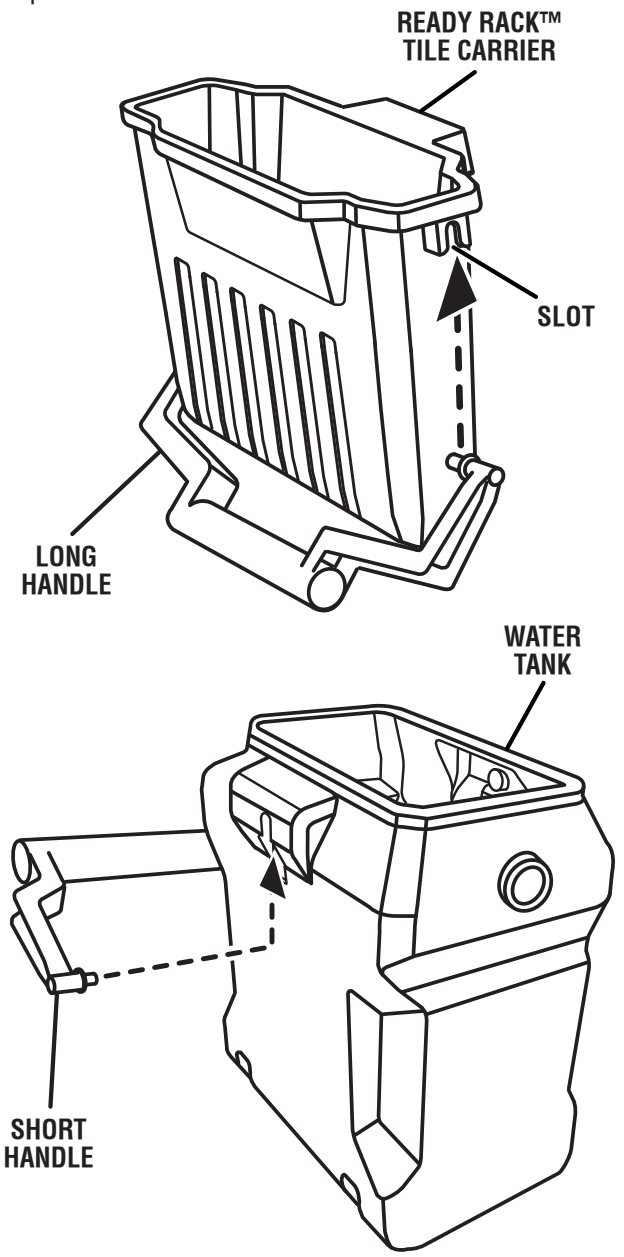

Fig. 6

ASSEMBLING THE WSUV™ WET SAW UTILITY VEHICLE / LEG STAND

See Figure 7.

Many of the WSUV™ / leg stand parts are movable. All hardware must be tightened securely but not so tight that the utility vehicle / leg stand won't open and close. For easier assembly, match letter to letter.

- Place a curved spacer over the end of the lower brace (F).
- Insert a hex head bolt and small flat washer at the bottom of the right outer tube (G) and into the lower brace (F). Tighten securely. Repeat for the other side.
- Place a carriage bolt through the center hole in the outer tubes (G) then place a spacer on the bolt.
- Slide the bolt/spacer into the inner leg assembly (G) and secure in place using a lock nut. Do not overtighten. Repeat for the other side.
- Place the center brace on top of the inner leg assembly (curve side up) with the stop pin under the pedal assembly latch.

  NOTE: The stop pins rest on top of inner leg assembly.
- Insert a carriage bolt through the top hole of the inner leg assembly then slide a spacer on the bolt. Repeat for the other side.
- Slide the center brace onto the bolt (F) and secure in place using a lock nut. Repeat for the other side.
- With the curve handle turned downward, secure the upper tubes (E and H on the right side, and A and D on the left side) to the leg stand using carriage bolts, spacers, and lock nuts. The tube with the diverter valve attached should be placed on the left side of the leg stand.
- Locate the lock nut and two flat washers.
- Slide the flat washer, wheel, and flat washer onto the axle through the hole in the center of the wheel. Secure in place using lock nut.
- Repeat with the second wheel.

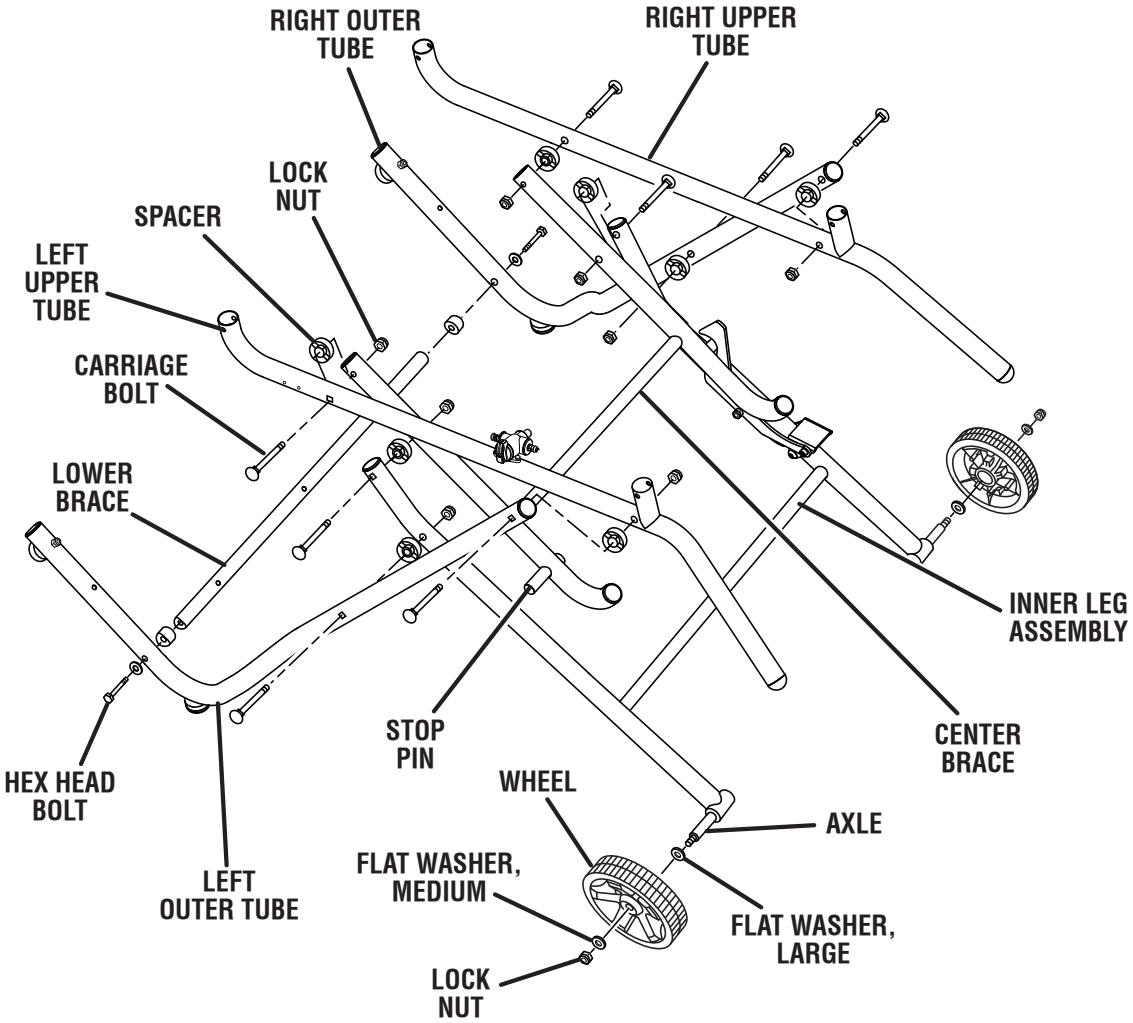

Fig. 7

LOCKING/UNLOCK THE SLIDING TABLES

See Figure 8.

This saw has three sliding tables: front, middle, and rear. The front and rear table move together.

To lock the front and rear tables:

- Pull the front table to the front of the water tray frame.
- From under the right side of the table, align the hole in the rail with the pin in the sliding table lock lever. Push the pin into the rail locking the table.

  NOTE: When the front table is locked, the back table will not move.

To lock the middle table:

- Pull the middle table to the front of the frame and against the front table.
- Turn the table lock clockwise to secure the front table to the middle table.

INSTALLING THE WATER TRAY FRAME ASSEMBLY TO THE LEG STAND

See Figure 8.

- Lock the table stop by-pass by pulling up on the stop and turning it until the slot in the center of the lock is horizontal (left to right).
- Lock the sliding tables.
- Slide the tubes on the water tray frame assembly into the tubes on the leg stand.
- Insert short carriage bolts into holes and tighten securely using lock nuts.

INSTALLING MOTOR HEAD ASSEMBLY TO WATER TRAY FRAME

See Figure 9.

- Align the holes in the motor head assembly with the holes on the side of the water tray frame.
- Insert short cap bolts. Finger tighten using nuts.
- Slide long cap bolts into sleeve. Insert into holes. Finger tighten.
- Tighten all cap bolts using an 8 mm hex key.

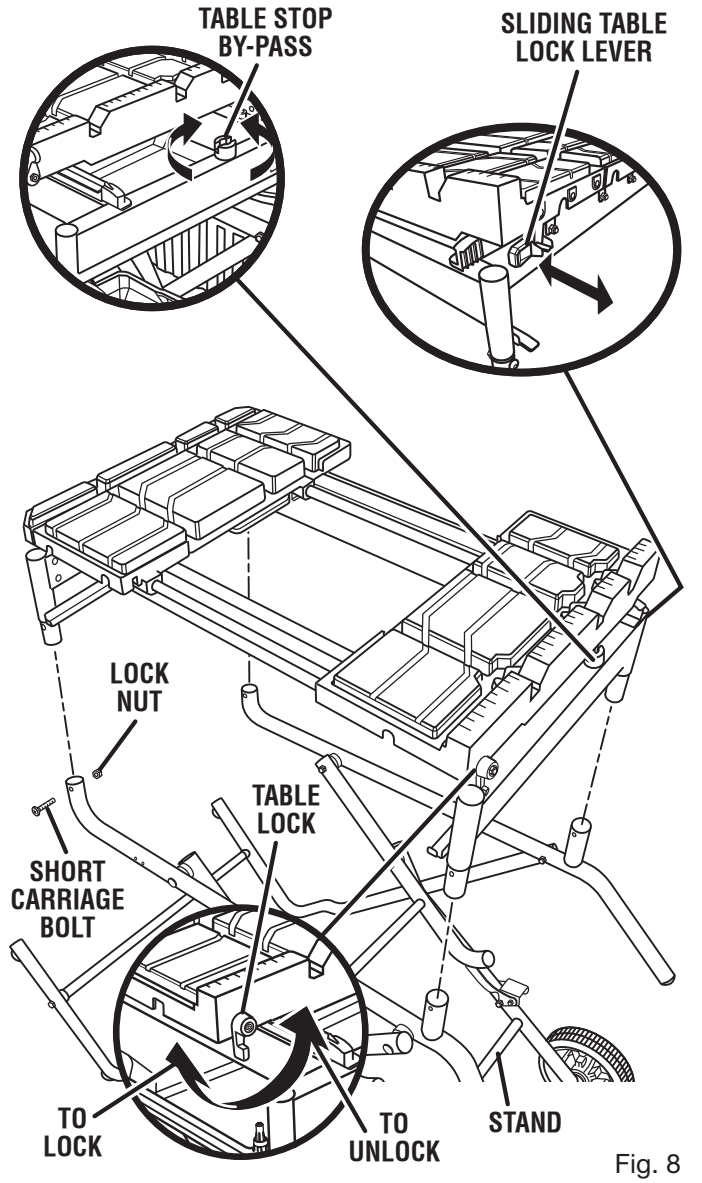

Fig. 8

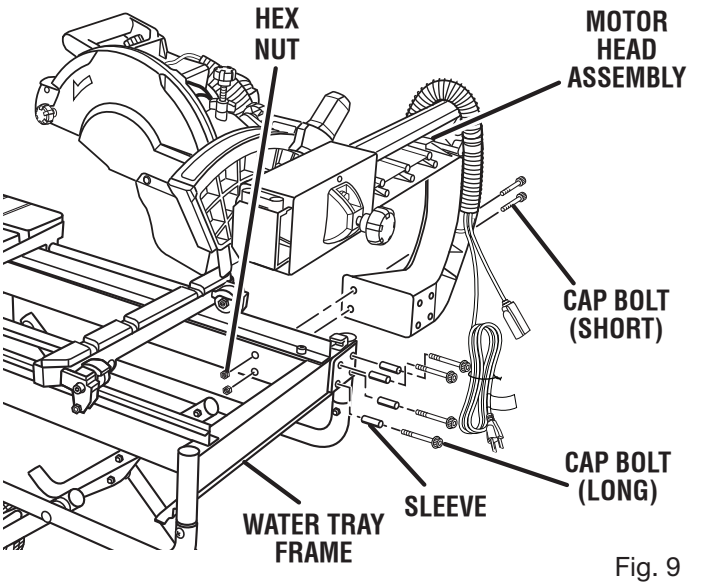

Fig. 9

INSTALLING WATER SUPPLY VALVE

See Figure 10.

- Unscrew the connector from the water supply valve and remove the mounting bracket.
- Align holes in mounting bracket with holes on top of upper tube and secure in place using screws and nuts.
- Slide the threaded end of the valve into the mounting bracket hole and secure using the connector.

INSTALLING CLEAR TUBES AND CLEANING NOZZLE

See Figure 11.

NOTE: Hose clamps secure clear tubes to valves, connectors, etc. To attach a hose clamp, squeeze the ends of the clamp together then slide the clamp over one end of a short clear tube. Once the tube has been attached to a valve, connector, etc., squeeze the clamps ends together and slide the clamp over the tube covering the connector.

- Grasp the diverter valve firmly then push the end of the short clear tube over the left connector. Secure with a hose clamp.
- Slip the tube onto the valve assembly in the saw arm by pushing the tube over the connector. Secure with a hose clamp. Attach the clear tube to leg stand using the tube clips on top of the leg stand.
- Holding the diverter valve, connect the long clear tube (with the cleaning nozzle) to the right side of the diverter valve by pushing the tube over the connector. Secure with a hose clamp. Store the nozzle in the cleaning nozzle storage.

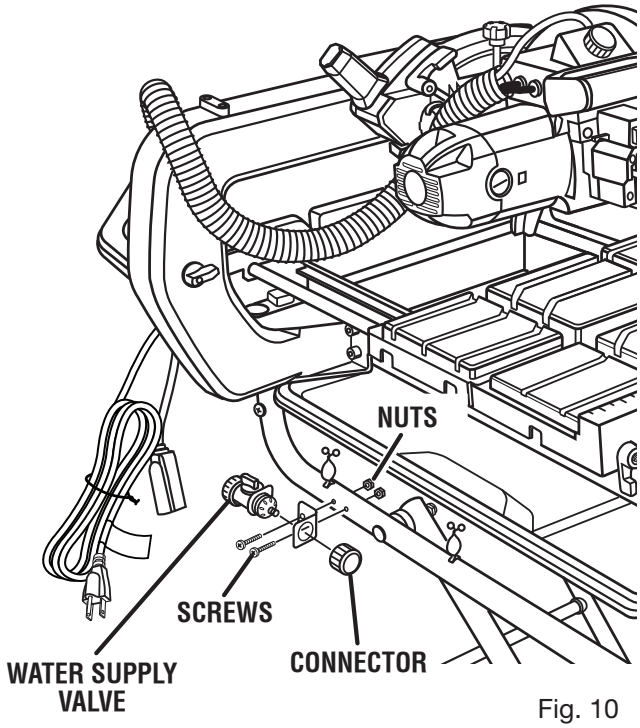

Fig. 10

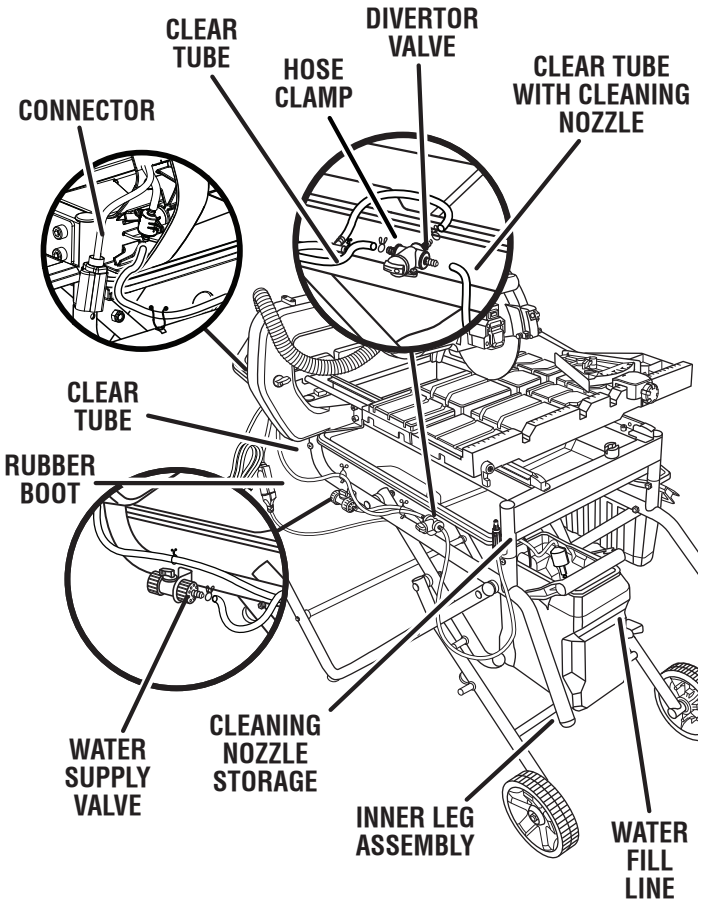

Fig. 11

INSTALLING THE WATER TRAY AND TRAY EXTENSIONS

See Figures 12 - 14.

- From the right side of the saw, place the water tray (drain plug end to the left) on the lip at the bottom of the water tray frame. Slide the water tray in under the sliding table.
- Standing at the back of the saw, hold the water tray extension at an angle. Tilt the tray and slip the guide between the frame top and frame bottom.
- Once the extension slides into place, lower the water tray extension until the tray tabs fit into the holes under water tray frame.
- From the left side of the saw, slide the second (or side) water tray extension into the slots on the back water tray extension.

INSTALLING SLIDING TABLE EXTENSION

See Figure 15.

- From the side of the saw, align the pins on the sliding table extension with the holes in the sliding table frame.
- Secure in place by turning the table extension lock knob underneath the extension clockwise.

  NOTE: For added support when making diagonal cuts of large workpieces, turn the sliding table extension upside down and secure in holes on middle table.

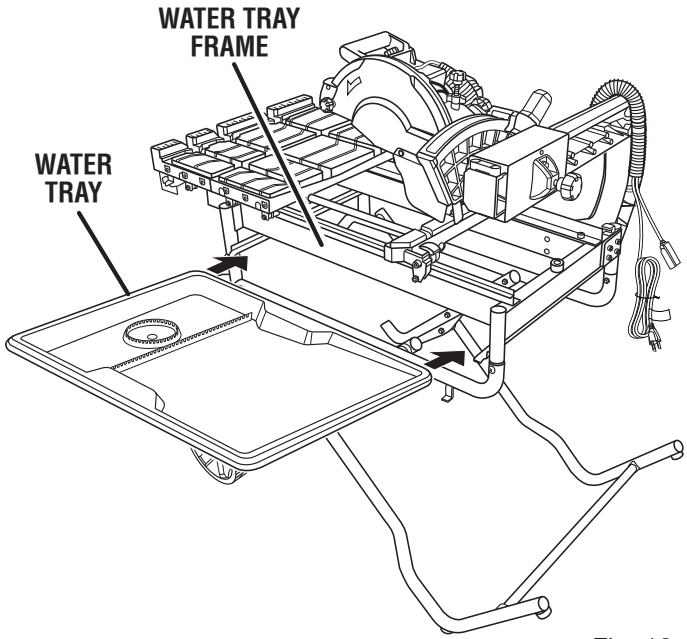

Fig. 12

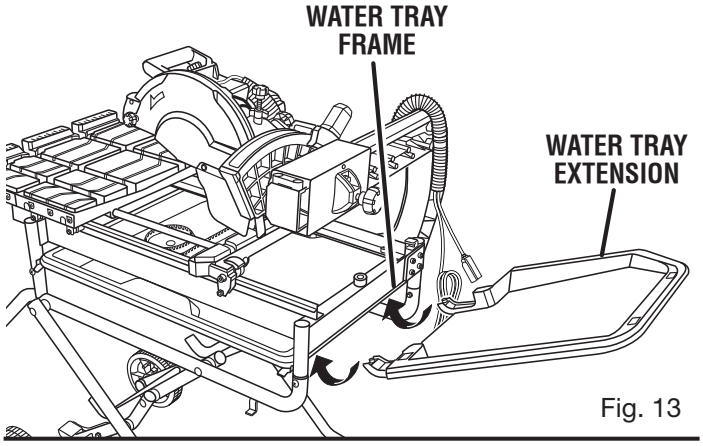

Fig. 13

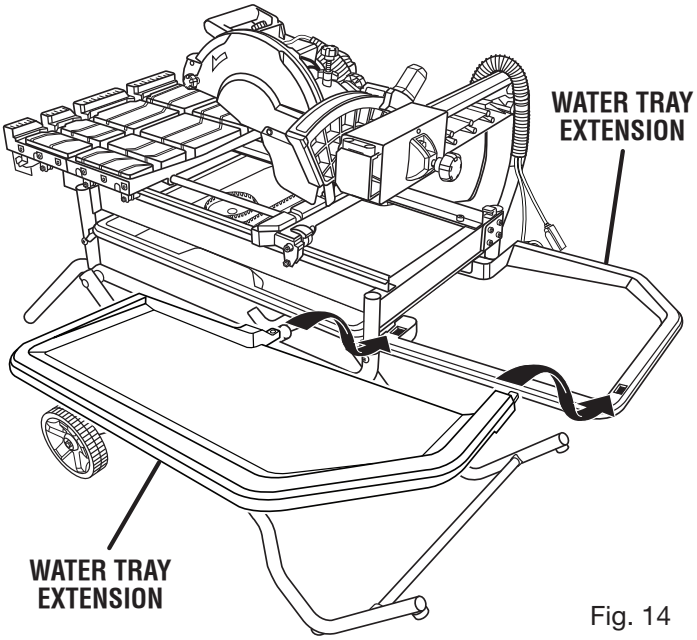

Fig. 14

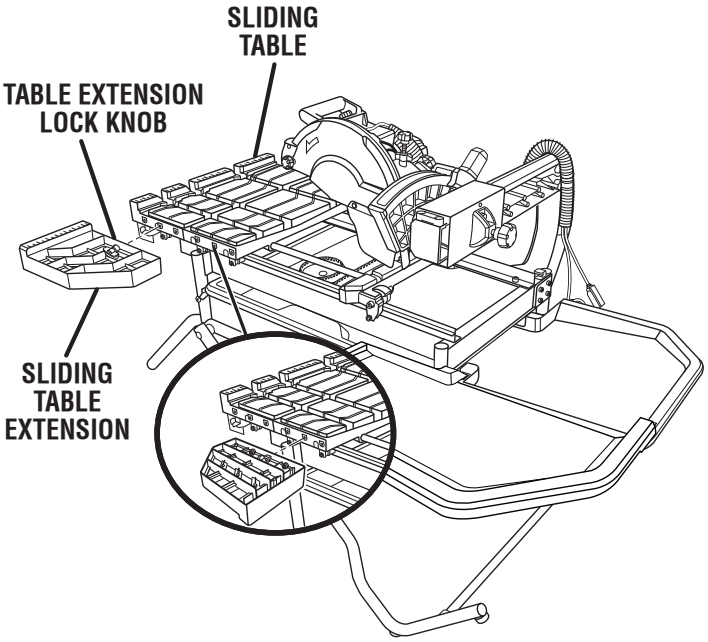

Fig. 15

INSTALLING THE MITER GUIDE

See Figure 16.

The miter guide can be used from both the left and right side of the cutting wheel.

- Place the slot on the underside of the miter guide on the sliding table fence.
- Lock the miter guide securely to the table by turning the miter guide knob clockwise.

To adjust angles:

- Loosen the lock knob.
- Set to the desired angle by moving the guide left or right.
- Tighten the knob securely before turning on the saw.

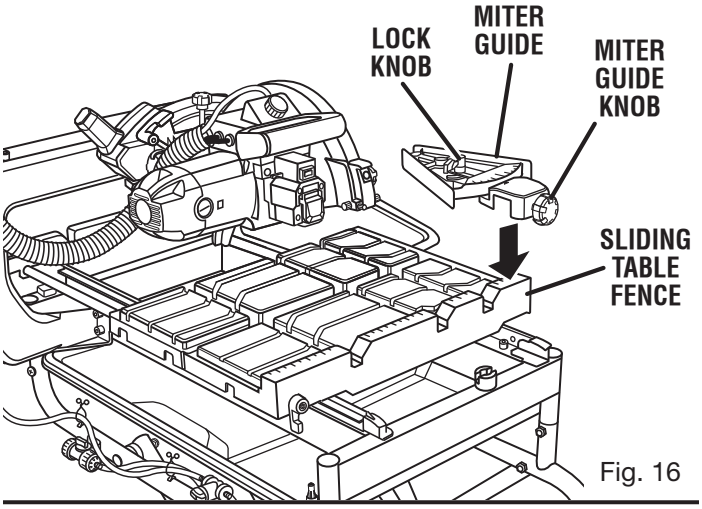

Fig. 16

INSTALLING NEVER DRY VALVE, WATER PUMP, AND WATER TANK

See Figure 17.

- Unscrew the connector from the never dry valve.
- From inside the water tank, place the threaded end of the never dry valve into the hole on the side of the tank.
- Secure in place by retreading the connector to the valve.
- Connect a garden hose to the never dry valve or fill the water tank two-thirds full by pouring water to the two-thirds level of the tank.
- Center the water tank on the lower brace of the leg stand and push the tank firmly against the center brace until it locks into place.
- Push the clear tube of the T-connector assembly over the garden hose attachment on the leg stand. Secure with a hose clamp.
- Push the short clear tube of the T-connector assembly over the connector on the back of the diverter valve (as shown in figure 11).
- Attach the long clear tube (with the check valve) to the submersible water pump and set the pump in the bottom of the water tank. Secure tube with hose clamps.
- Push back rubber boot on electrical cord and plug pump into an outlet or extension cord. Pull boot over cord connections to help keep water off the plug.

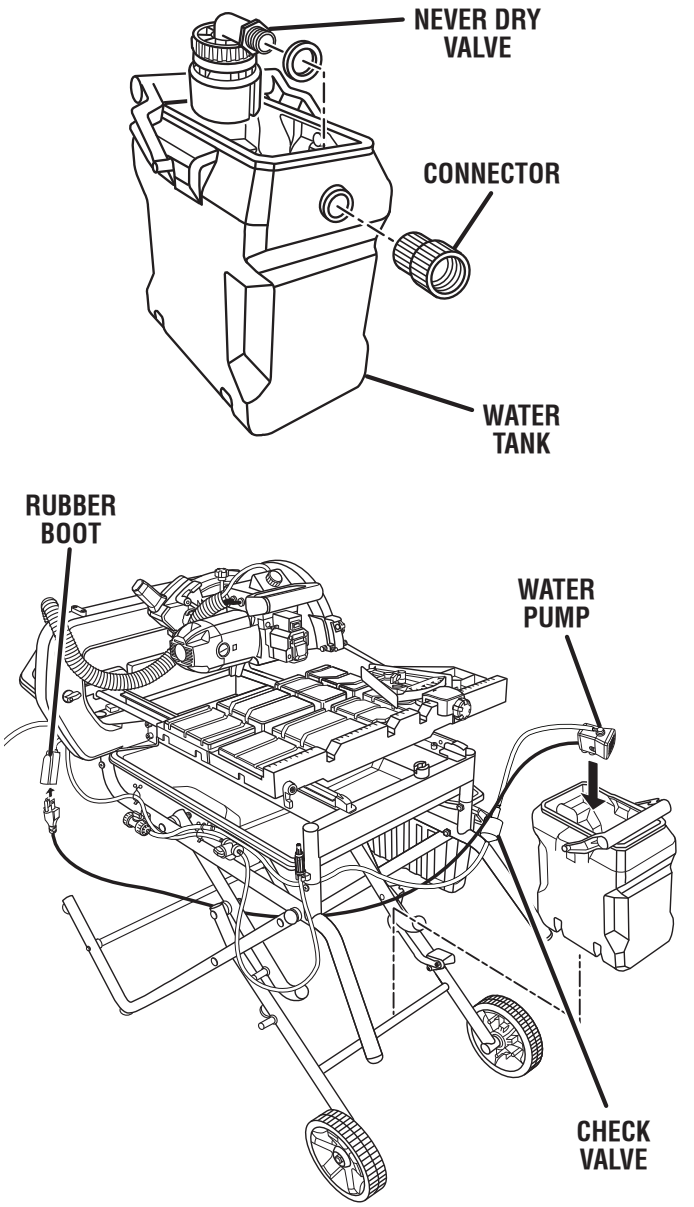

Fig. 17

INSTALLING THE READY RACK™ TILE CARRIER

See Figure 18.

Snap the carrier over the upper tube on the leg stand. The carrier provides a storage area for cut tiles while the holes in the bottom allow water to drain away from the tiles.

CONNECTING THE GARDEN HOSE

See Figure 19

The water supply must come from a fresh water main. NEVER turn the water supply on high (fully opened).

The water supply valve provides a convenient on/off for adjusting the water flow onto the cutting wheel. When used properly, the water supply valve adjusts the water flow to the perfect, optimal rate.

- Uncoil the garden hose.
- With the water main faucet turned completely off, attach the end of the garden hose to the water supply valve. Tighten by hand.

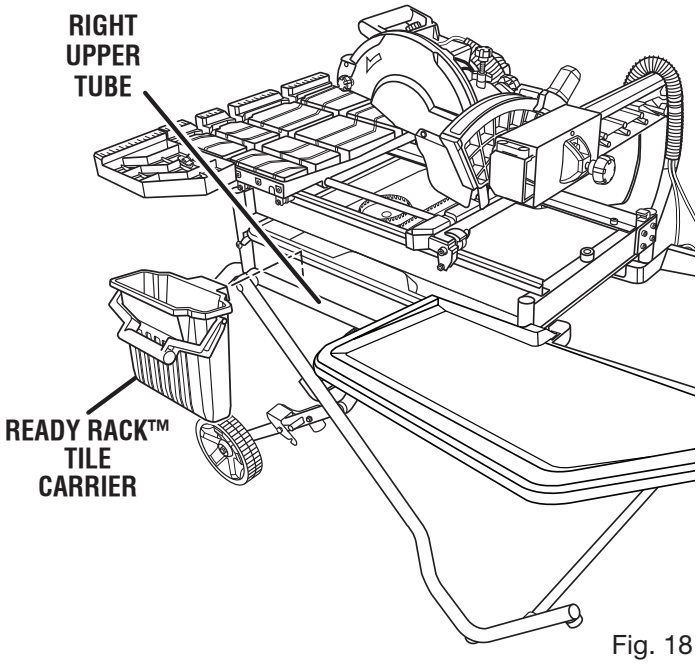

Fig. 18

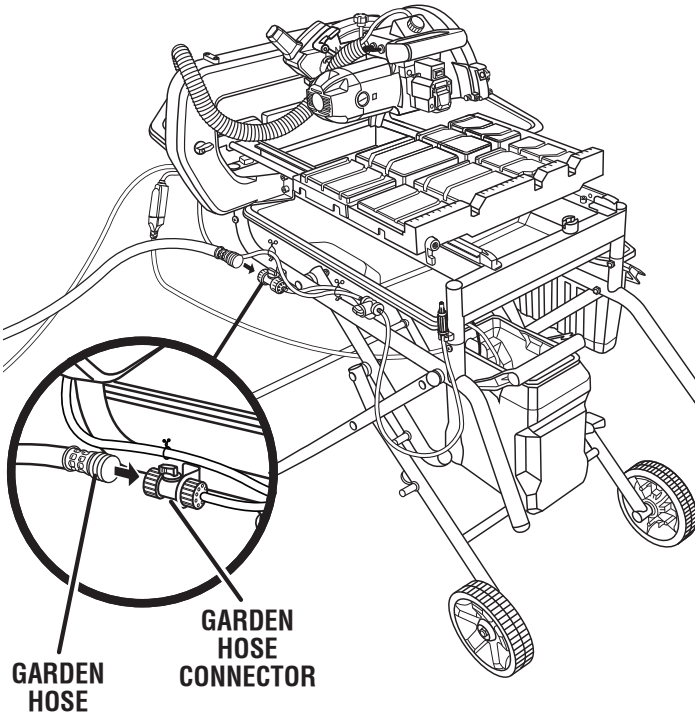

Fig. 19

TO CLOSE / OPEN THE WSUV™ WET SAW UTILITY VEHICLE / LEG STAND

See Figures 20 - 22.

- Remove water tray, water tray extensions and the water tank, and any workpieces from the tool. Store.
- Place the sliding table in the center of the frame and lock front and middle tables in place.
- Lower the wheel and secure by locking the saw head in place using the lock knob and lock pin.

To close the leg stand:

- At the same time, step on the release lever, grasp the grips, and lift the handles up and away from the body.
- Push the saw until the release lever clicks and locks into place.

To move the leg stand:

- Holding the grips firmly, pull the handles toward you until the leg stand and saw are balanced on the wheels.
- Push the saw to the desired location then either open the leg stand for saw operation or store the saw in a dry environment.

To open the leg stand:

- Step on the release lever and pull the grips toward you at the same time.
- Once the leg stand is released from the release lever, ease the leg stand toward the floor by pushing the grips toward the floor.
- With your hands on the grips, push the leg stand towards the ground until the saw is in an open position.

  NOTE: The release lever will close over the pins locking the leg stand in an open position.

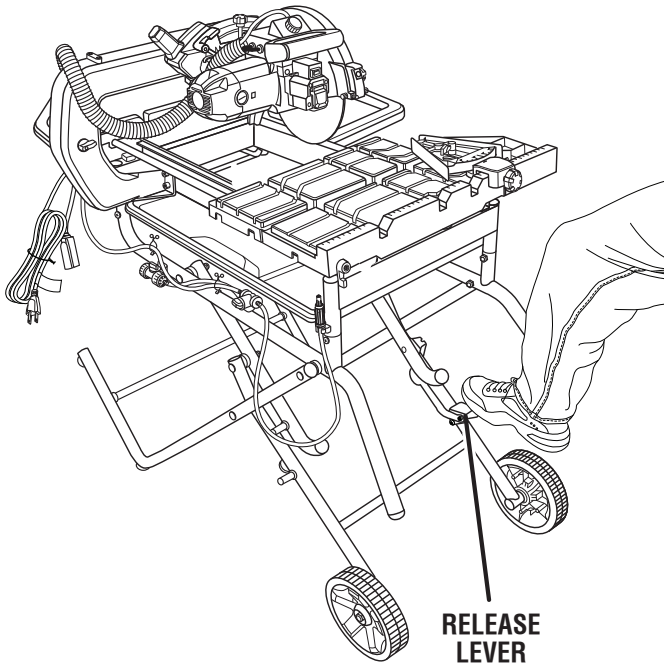

Fig. 20

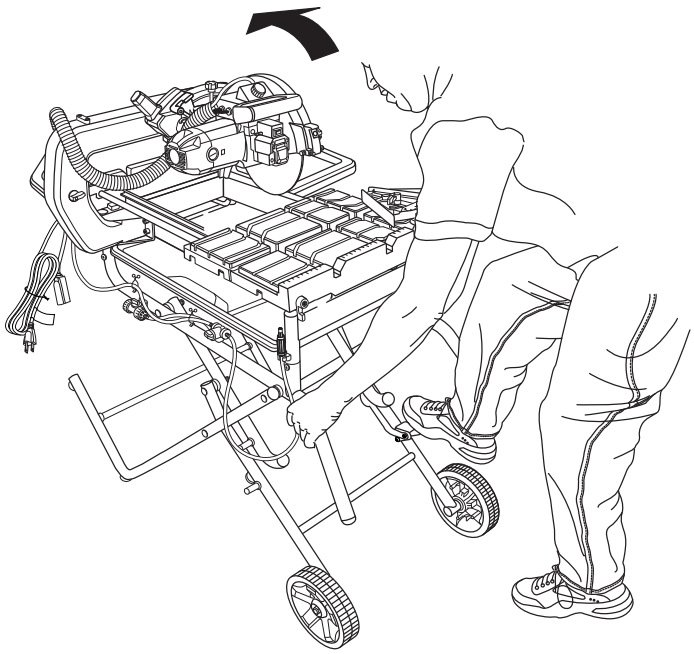

Fig. 21

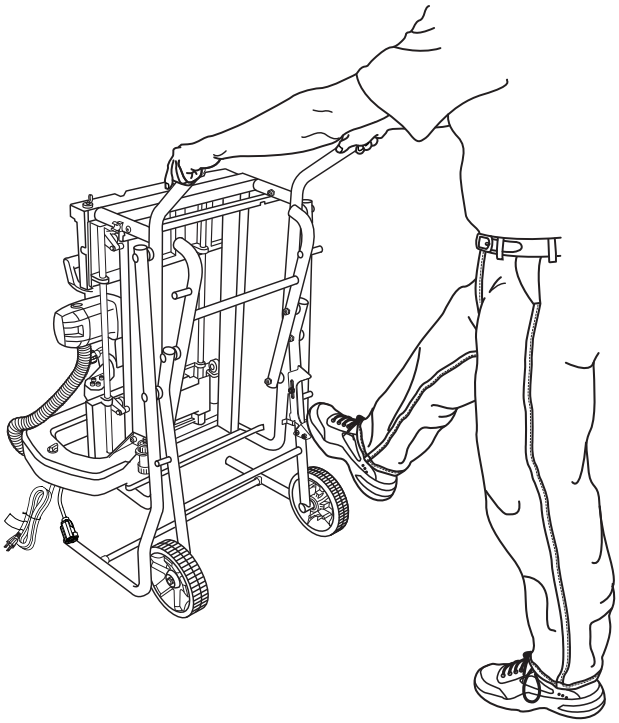

Fig. 22

TILE CUTTING WHEEL

For maximum performance and safety, it is recommended that you use the 10 in. cutting wheel provided with your saw. Additional cutting wheels of the same high quality are available at your local dealer.

WARNING:
Do not use cutting wheels rated less than the no load speed of this tool. Failure to heed this warning could result in personal injury. Do not use wheel with cracks, gaps, or teeth.

WARNING:
To prevent possible electrical hazards, have a qualified electrician check the line if you are not certain that it is properly wired.

INSTALLING TILE CUTTING WHEEL

See Figures 23 - 24.

WARNING:
A 10 in. tile cutting wheel is the maximum wheel capacity of the saw. Never use a wheel that is too thick to allow wheel washer to engage with the flats on the spindle. Larger wheels will come in contact with the wheel guard, while thicker wheels will prevent the wheel nut from securing the wheel on the spindle. Either of these situations could result in a serious accident and can cause serious personal injury.

- Unplug the saw.
- Turn the wheel guard lock counterclockwise to unlock.
- Pull the wheel guard open to expose the spindle.
- Depress and hold the spindle lock.
- Using the wheel wrench provided, remove the wheel nut. Release the spindle lock button.

  NOTE: Remove the wing nut to release the wheel wrench from storage.
- Remove the outer washer.
- Slide the cutting wheel onto spindle.

WARNING:
If the washer has been removed, replace it before placing wheel on spindle. Failure to do so could cause an accident since the wheel will not tighten properly. Never use wheels that have openings, grooves, or teeth on this tool.

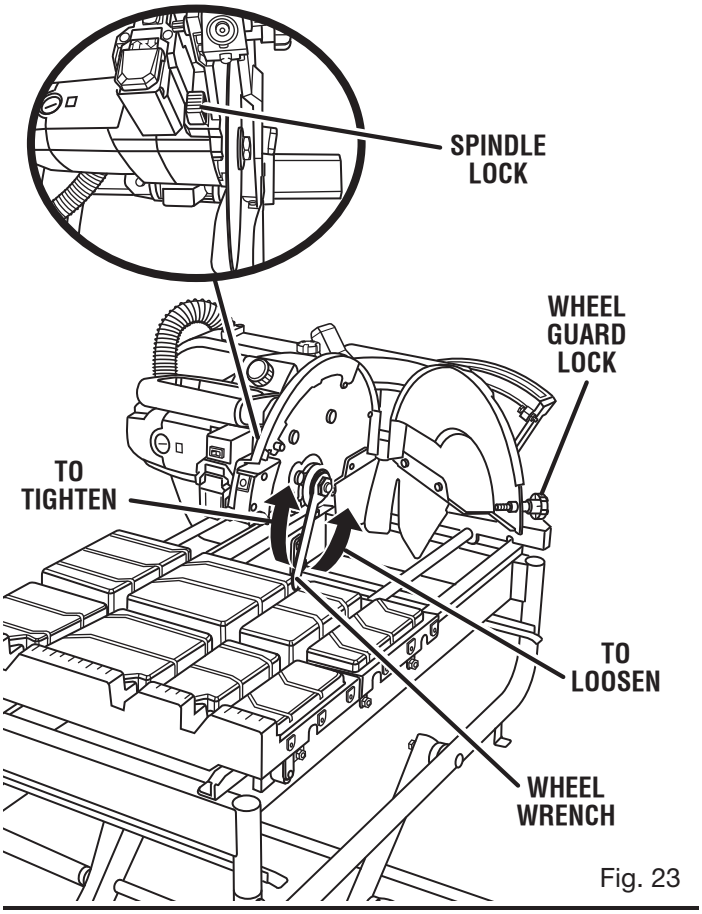

Fig. 23

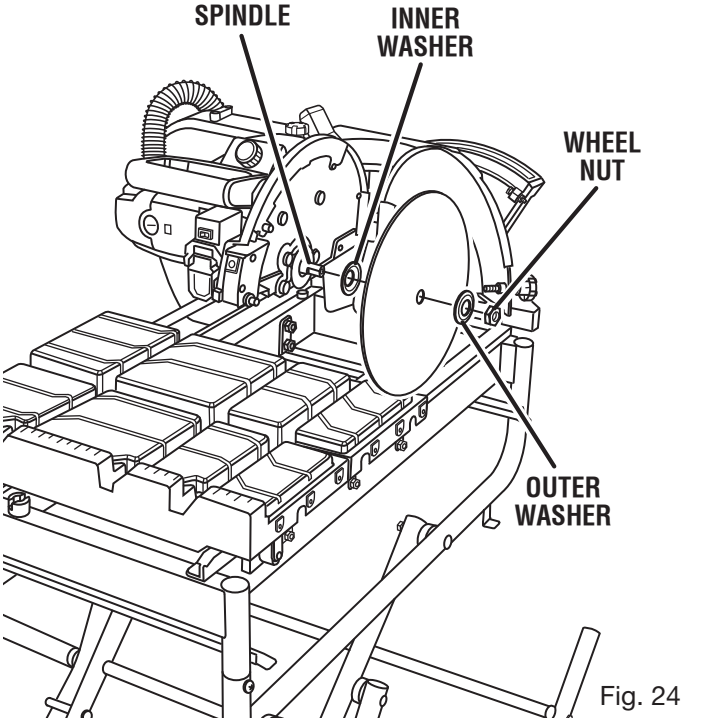

Fig. 24

- Wipe a drop of oil onto the washer where it contacts the cutting wheel.
- Place an outer washer onto the spindle. The double “D” flats on the washer align with the flats on the spindle. Be sure the hollow side of the washer is against the cutting wheel.
- Place wheel nut on spindle.
- Depress the spindle lock button and rotate the cutting wheel until the spindle locks.
- Using the wheel wrench provided, tighten nut securely. Release the spindle lock button.
- Close and lock the wheel guard.

ALIGNING THE LASER GUIDE LINE

See Figure 25.

DANGER:

Laser radiation. Avoid direct eye contact with light source.

WARNING:

Use of controls or adjustments or performance of procedures other than those specified herein may result in hazardous radiation exposure.

Draw a line on the tile. When the laser guide switch is turned on it will generate a red line on the work surface. This line will let you see your mark and the laser guide line at the same time, and will assist you in lining up the mark for more accurate cutting of the tile.

Align the laser line and the mark with the wheel in the cutting position using the laser adjustment dials.

Make several practice cuts on different styles and thickness of material. Repeat the steps as necessary.

To adjust the laser:

- Plug in the saw and push the laser guide switch to show the laser guide line.
- Position the laser line near the left edge of your mark on the work surface.
- Turn the laser left/right adjustment dial move the laser line either left or right.
- To move the laser line more towards the front or back of the workpiece, turn the laser front/back adjustment dial.
- When all adjustments are complete, secure adjustments by turning the lock knob to the right.

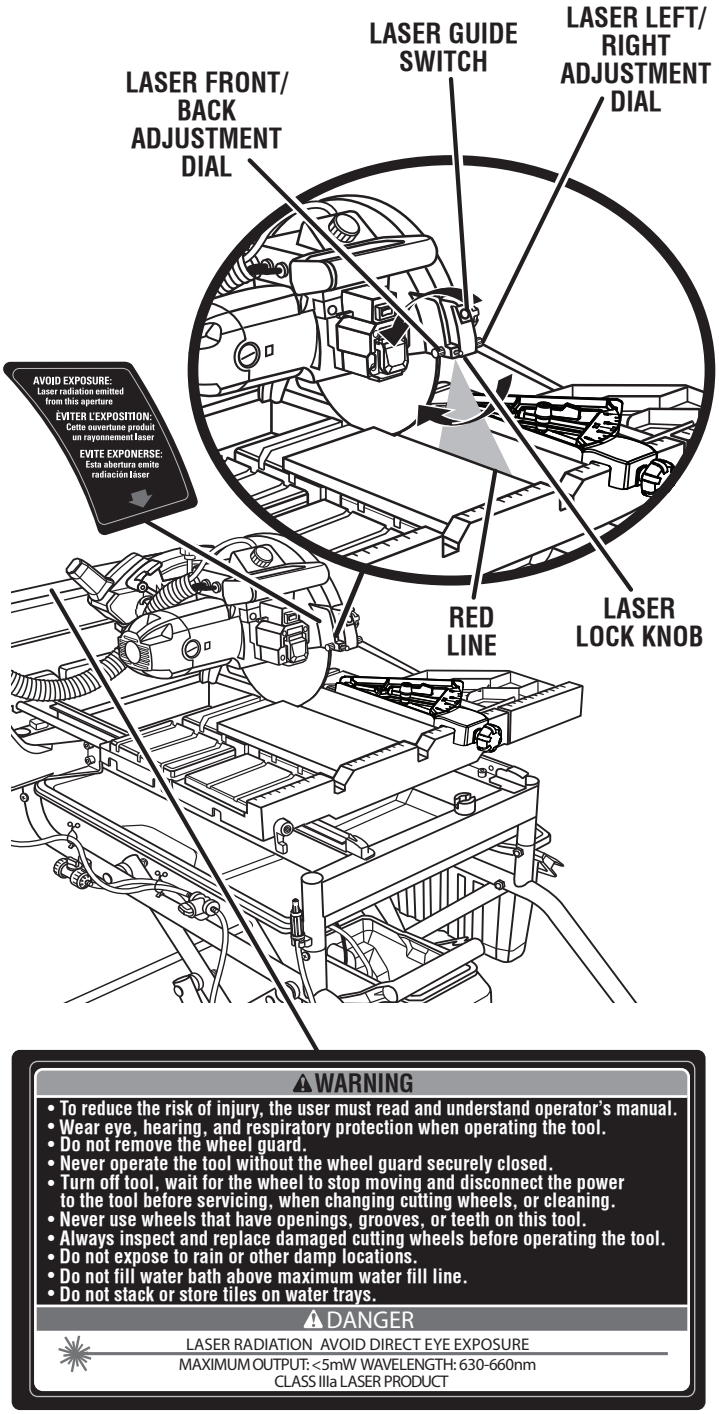

Fig. 25

WARNING:
Do not allow familiarity with tools to make you careless. Remember that a careless fraction of a second is sufficient to inflict serious injury.

WARNING:
Always wear eye protection with side shields marked to comply with ANSI Z87.1. Failure to do so could result in objects being thrown into your eyes, resulting in possible serious injury.

WARNING:
Do not use any attachments or accessories not recommended by the manufacturer of this tool. The use of attachments or accessories not recommended can result in serious personal injury.

APPLICATIONS

You may use this tool for the purposes listed below:

- Straight line cutting operations such as cross cutting, mitering, ripping, and beveling

NOTE: This saw is designed to cut man-made tile, pavers, and stone tile products only.

USING THE PUMP SWITCH

See Figure 26.

The pump switch on the saw arm is used when using the submersible pump. There are three positions for the pump switch:

A) With the pump switch in position A (button up), the pump will start when the on/off switch is turned on.

B) With the pump switch in position B (button down), the pump switch is always on and the pump is always running.

C) With the pump switch in position C (button in the middle), the pump is always off.

USING THE SUBMERSIBLE PUMP

The submersible pump draws water from the water tank. The operator can use fresh water by connecting a garden hose to the Never Dry Valve or recycle the water by filling the water tank two-thirds full.

- Submerge pump in water tank.
- Plug cord into a GFCI electrical outlet or the pump outlet.
- As the pump starts, it will pump out any air trapped in the line (this is normal).
- After the air is removed, water will begin flowing through the line.

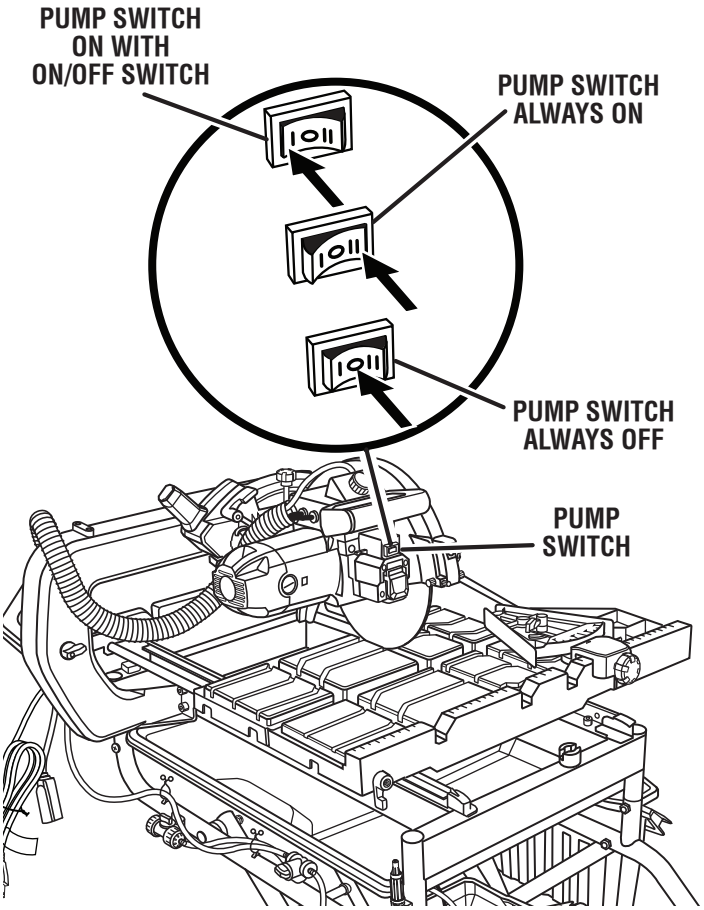

Fig. 26

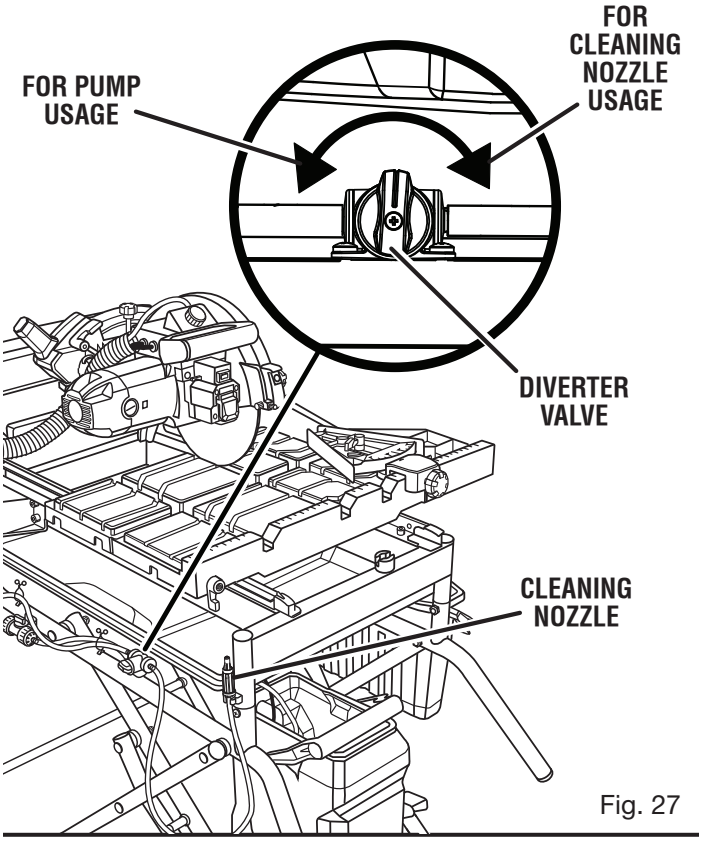

Fig. 27

USING THE DIVERTOR VALVE FOR EITHER THE PUMP OR CLEANING NOZZLE

See Figure 27.

- Unscrew the drain plug located under the water tray.
- Center the water tank on the lower brace of the leg stand and push the tank firmly against the center brace until it locks into place.
- Turn the garden hose connector off.

To use the Never Dry Valve:

- Connect a garden hose to the Never Dry Valve and turn on the water from the water main.
- Turn the diverter valve to the left to run water through the saw arm and over the cutting wheel when the saw and pump switch are both turned on.

To use the cleaning nozzle:

- Remove the cleaning nozzle from the storage holder, and use the nozzle to clean the wheel, water tray, etc.
- When the diverter valve to turned to the right and the saw and pump switch are turned on, water will flow through the cleaning nozzle.

ON/OFF SWITCH

See Figure 28.

This saw is equipped with an on/off switch that has a built-in locking feature. This feature is intended to prevent unauthorized and possible hazardous use by children and others.

To turn the saw on:

- Lift the switch to turn **ON**.

To turn the saw off:

- Press the switch down to turn **OFF**.

To lock the saw:

- With the saw turned **OFF**, install a padlock (not included) through the hole in the switch.

WARNING:
In the event of a power failure or when the tool is not in use, turn the switch **OFF**. This action will prevent the tool from accidentally starting when power returns.

WARNING:
ALWAYS make sure the workpiece is not in contact with the cutting wheel before operating the switch to start the tool. Failure to heed this warning may cause the workpiece to be kicked back toward the operator and result in serious personal injury.

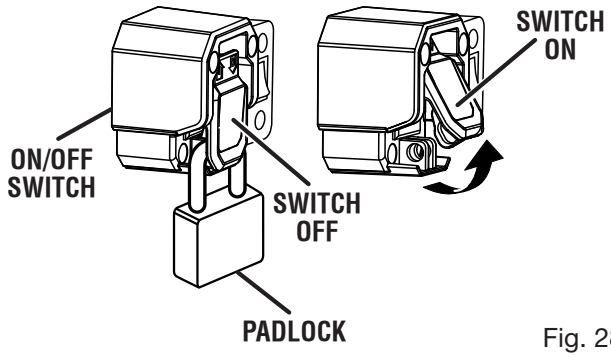

Fig. 28

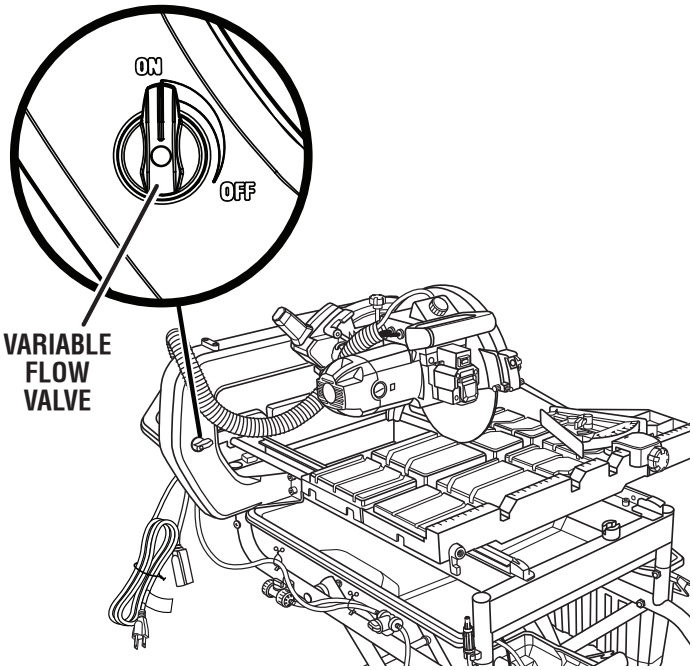

Fig. 29

WARNING:
To reduce the risk of accidental starting, ALWAYS make sure the switch is in the **OFF** position before plugging tool into the power source.

USING THE VARIABLE FLOW VALVE

See Figure 29.

- First turn on the variable flow valve and then the water supply valve.
- Slowly turn on the spigot from a fresh water main. Watch water flow over the cutting wheel and adjust to desired rate.

LOCKING / UNLOCKING THE SAW ARM

See Figure 30.

To unlock and raise the saw arm:

- Push down on the “D” handle and pull out the lock pin.
- Firmly grasp the “D” handle and apply downward pressure while at the same time turning the lock knob counterclockwise.
- Slowly raise the saw arm.

To lock the saw arm:

- Firmly grasp the “D” handle and apply downward pressure while at the same time turning the lock knob clockwise to lock.
- Push in the lock pin.

CUTTING LARGE TILE

See Figure 31.

The middle table will add additional support when cutting larger workpieces.

- Turn the table lock counterclockwise to unlock the front table from the middle table.
- Pull the front table as far forward as it will extend.

  NOTE: the table stop by-pass will stop the middle table from moving all the way forward.
- Place a large tile against the fence then make the cut.

SLIDING CUTTING HEAD

See Figure 32.

The cutting head can be moved into three positions along the saw arm providing different cutting options.

To move the cutting head:

- Place material to be cut in the most stable position on the saw table.
- To unlock, turn the cutting head lock counterclockwise.
- Pull the lock pin out and continue to hold the lock while moving the cutting head to the desired position on the saw arm.
- When the cutting head locks into one of the three holes in the back of the saw arm, turn the cutting head lock clockwise to secure the cutting head.

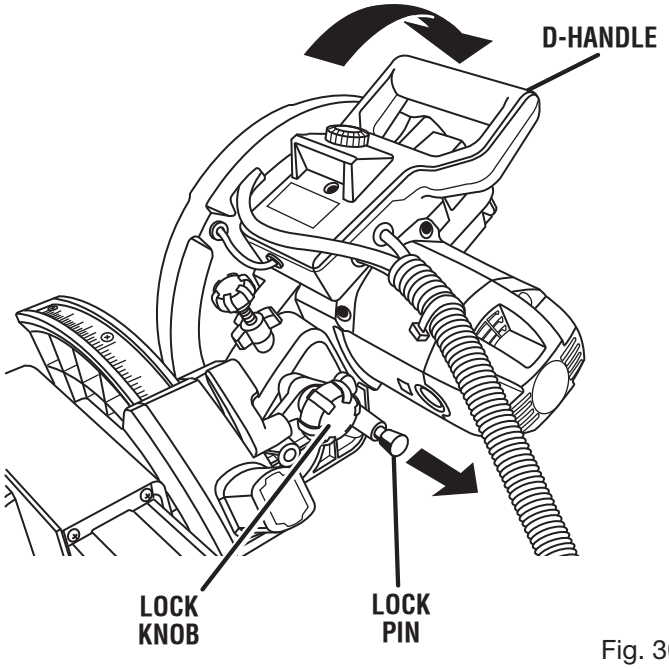

Fig. 30

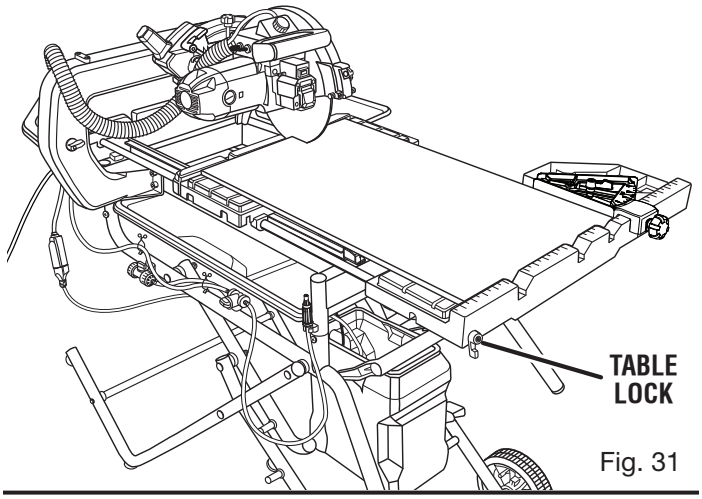

Fig. 31

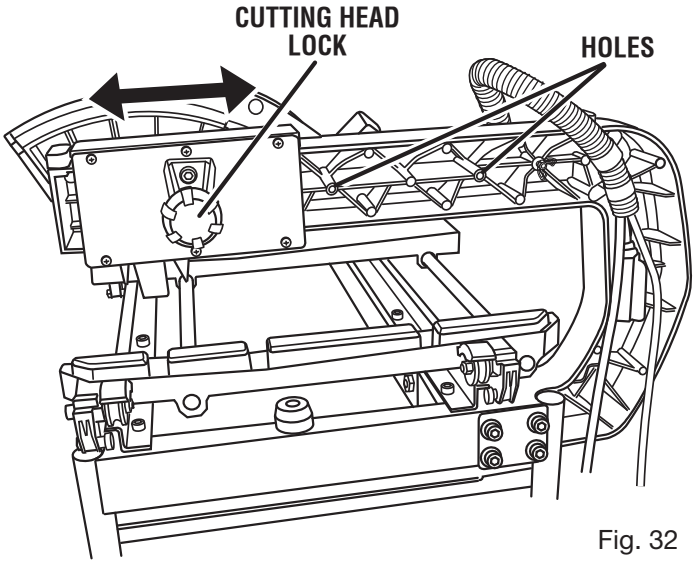

Fig. 32

TO CHANGE CUTTING WHEEL DEPTH

See Figure 33.

The depth stop limits the wheel's downward travel allowing the wheel to go below the table enough to maintain full cutting capacities.

- Unplug the saw.
- To adjust the depth, loosen the wing nut located on the depth stop knob.
- Turn the depth stop knob. Set the wheel to the correct cutting depth (wheel just below the table surface). Lower the cutting wheel to the table to check wheel clearance.
- Tighten the wing nut.

TO CHANGE CUTTING WHEEL ANGLE (BEVEL)

See Figure 34.

NOTE: A 90° cut has a 0° bevel and a 45° cut has a 45° bevel.

- Unlock bevel control by lifting the bevel lock lever.
- Standing at the right side of the saw, place the left hand on the "D "handle and the right hand on the grip.
- Lift the cutting head and move the head to the desired angle.
- Tighten bevel control by pushing the bevel lock lever down.

TO ADJUST THE BEVEL INDICATOR

See Figure 35.

- With the cutting wheel at 90°, the bevel indicator should be pointing to 0°.
- Loosen the screw and position the bevel indicator to point to 0°. Retighten screw.
- With the wheel at 45°, the bevel indicator should be pointing to 45°.
- Loosen the two screws on the scale and adjust the scale until the bevel indicator points to 45°.

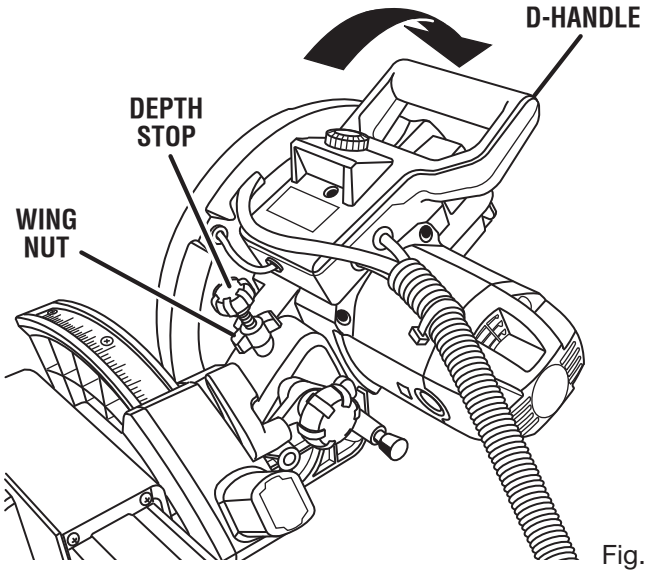

Fig. 33

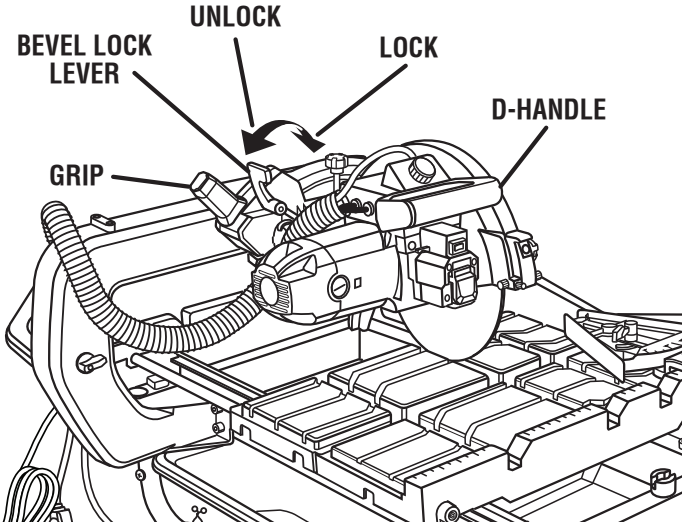

Fig. 34

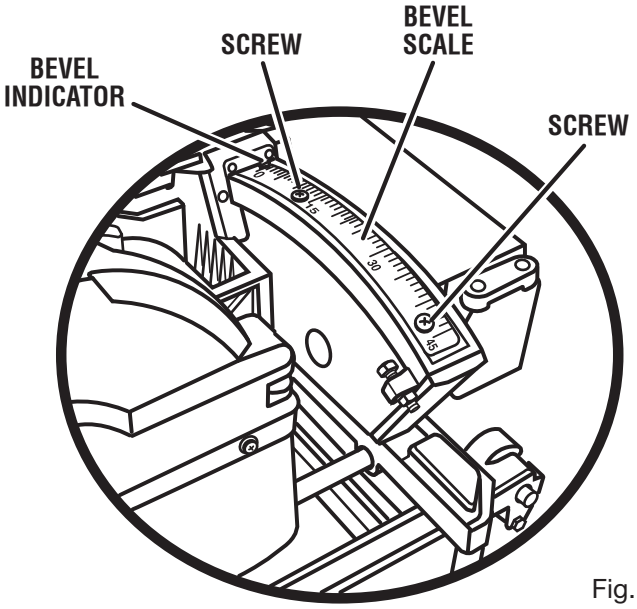

Fig. 35

MAKING CUTS

Always draw the line to be cut on the tile using a marker or grease pencil. If the tile is shiny and hard-to-mark, place masking tape on the tile and mark the tape.

A common problem when cutting tile is straying from the marked line. Once you've strayed from the mark, you can not force the wheel back to the line by twisting the tile. Instead, back up and recut the tile slicing off a small amount of tile until the wheel is back on track.

TO MAKE A CROSS CUT / RIP CUT

See Figure 36.

Cross / rip cuts are straight 90° cuts. The material is fed into the cut at a 90° angle to the wheel, and the wheel is vertical.

- Using a marker or grease pencil, mark the area to be cut on material.
- Set the miter guide to 0°, tighten the lock knob, and lock in place.
- Place the material on the table and firmly against the miter guide and fence.
- Make sure the material is clear of the cutting wheel before turning on the saw.
- Turn the on/off switch to the **ON** position.
- Turn the flow adjustment valve to the **ON** position.
- Let the cutting wheel build up to full speed and wait for the wheel to get wet before moving the material into the wheel.
- Hold the material firmly against the miter guide and feed the material into the cutting wheel.
- When the cut is made, turn the saw **OFF**. Wait for the cutting wheel to come to a complete stop before removing any part of the material.

TO MAKE A DIAGONAL CUT

See Figure 37.

Diagonal cuts are also referred to as "long point-to-long point cuts".

- Adjust miter guide to 45° using angle scale and tighten securely with knob.
- Place the material on the table and firmly against the miter guide and fence.
- Make sure the material is clear of the cutting wheel before turning on the saw.
- Turn the on/off switch to the **ON** position.
- Turn the flow adjustment valve to the **ON** position.
- Let the cutting wheel build up to full speed and wait for the wheel to get wet before moving the material into the wheel.
- Hold the material firmly against the miter guide and feed the material into the cutting wheel.
- When the cut is made, turn the saw **OFF**. Wait for the cutting wheel to come to a complete stop before removing any part of the material.

CROSS CUT / RIP CUT

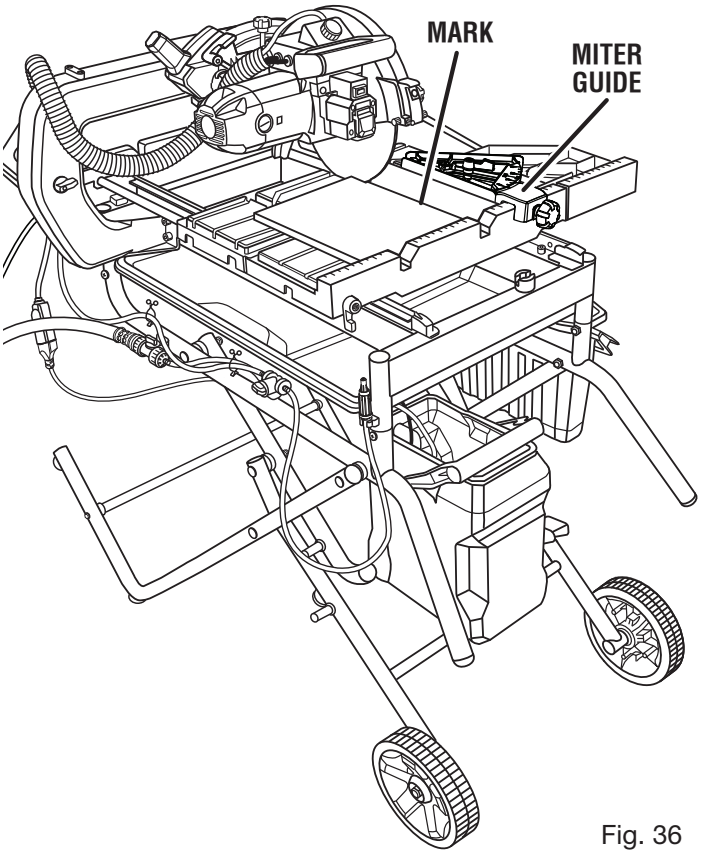

Fig. 36

DIAGONAL CUT

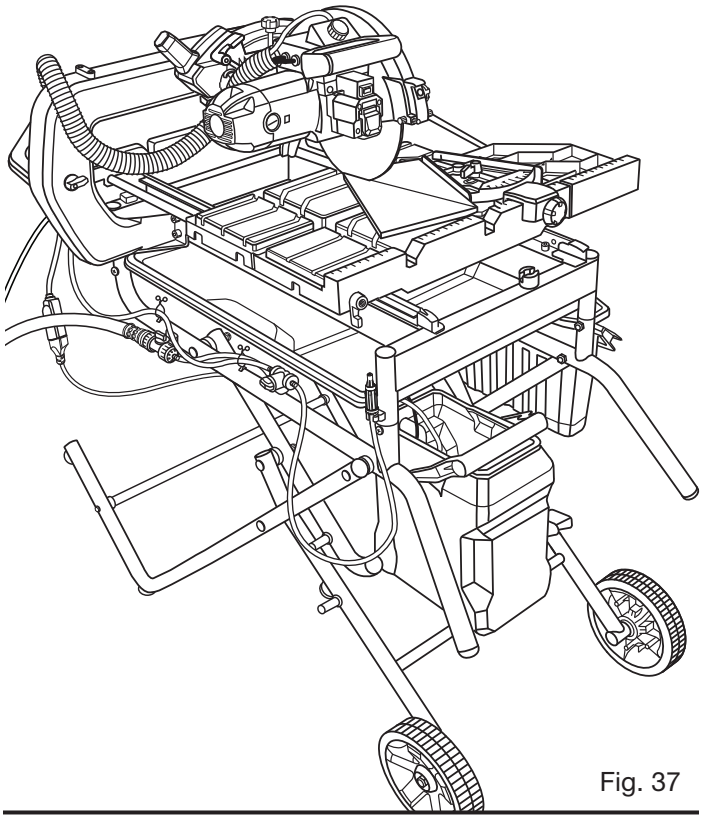

Fig. 37

TO MAKE A MITER CUT

See Figure 38.

Miter cuts are used for cutting outside and inside corners on material, decorative chair rail, and base molding with the material at any angle to the wheel other than 90°. Miter cuts tend to “creep” during cutting. This can be controlled by holding the workpiece securely against the miter guide.

- Using a marker or grease pencil, mark the area to be cut on material.
- Set the miter guide to the desired setting, lock in place, and tighten the lock knob.
- Place the material on the table and firmly against the miter guide and fence.
- Make sure the material is clear of the cutting wheel before turning on the saw.
- Turn the on/off switch to the **ON** position.
- Turn the flow adjustment valve to the **ON** position.
- Let the cutting wheel build up to full speed and wait for the wheel to get wet before moving the material into the wheel.
- Hold the material firmly against the miter guide and feed the material into the cutting wheel.
- When the cut is made, turn the saw **OFF**. Wait for the cutting wheel to come to a complete stop before removing any part of the material.

MITER CUT

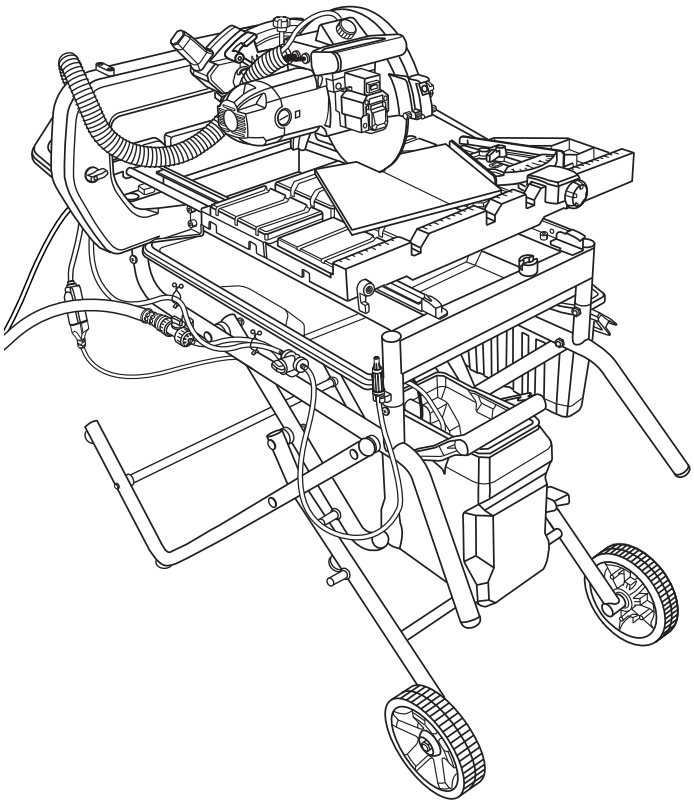

Fig. 38

TO MAKE AN L-CUT

See Figure 39.

L-cuts are cuts that remove a piece of tile to fit in a corner, around a cabinet, or a piece of molding and are made by two separate cuts.

NOTE: Only overcut on the bottom or underneath side of the material being cut.

- Using a marker or grease pencil, mark the area to be cut on both sides of the material.
- Set the miter guide to the desired setting, lock in place, and tighten the lock knob.
- Place the material on the table and firmly against the miter guide and fence.
- Make sure the material is clear of the cutting wheel before turning on the saw.
- Turn the on/off switch to the **ON** position.
- Turn the flow adjustment valve to the **ON** position.
- Let the cutting wheel build up to full speed and wait for the wheel to get wet before moving the material into the wheel.
- Hold the material firmly against the miter guide and feed the material into the cutting wheel.
- Make the cut far enough into the material without overcutting.
- When the cut is made, turn the saw **OFF**. Wait for the cutting wheel to come to a complete stop before removing any part of the material.

L-CUT

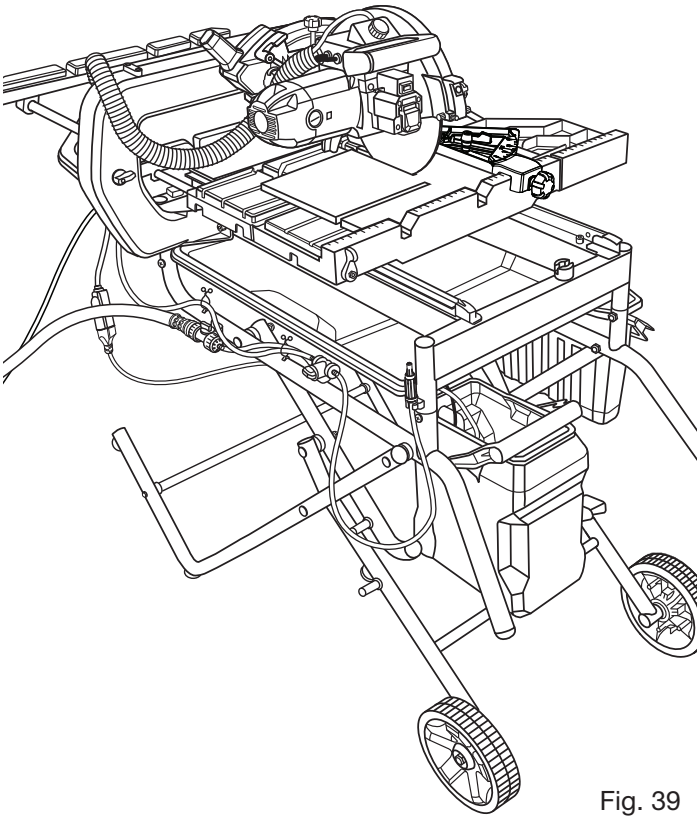

Fig. 39

- Turn the material over and make the cut along one of the marks. This time overcut the other line and the cut piece should separate from the rest of the material.
- When the second cut is made, turn the saw **OFF**. Wait for the cutting wheel to come to a complete stop before removing any part of the material.

TO MAKE A BEVEL CUT

See Figure 40.

Beveled cuts can be made from 0° to 45° angles. The saw will seat itself in one of the 0°, 22.5°, or 45° index points.

- Using a marker or grease pencil, mark the area to be cut on material.
- Loosen the bevel lock lever and move the saw arm to the desired bevel angle.
- Retighten the bevel lock lever.
- Set the miter guide to the desired setting, lock in place, and tighten the lock knob.
- Make sure the material is clear of the cutting wheel before turning on the saw.
- Turn the on/off switch to the **ON** position.
- Turn the flow adjustment valve to the **ON** position.
- Let the cutting wheel build up to full speed and wait for the wheel to get wet before moving the material into the wheel.
- Hold the material firmly against the miter guide and fence and feed the material into the cutting wheel.
- When the cut is made, turn the saw **OFF**. Wait for the cutting wheel to come to a complete stop before removing any part of the material.

TO MAKE A PLUNGE CUT

See Figure 41.

Plunge cuts are made by positioning the material directly underneath the cutting wheel and lowering the wheel onto the workpiece. This allows pieces to be cut from the center of the material.

- Using a marker or grease pencil, mark the area to be cut on material.
- Push down on the “D” handle and pull out the lock pin.
- Loosen the lock knob on the side of the motor head and position the motor head upward to its maximum height.
- Set the miter guide to the desired setting, lock in place, and tighten the lock knob.
- Turn the on/off switch to the **ON** position.
- Turn the flow adjustment valve to the **ON** position.
- Let the cutting wheel build up to full speed and wait for the wheel to get wet before moving the material into the wheel.
- Hold the motor head firmly by the handle.
- Move the material into the desired position for cutting.
- Slowly lower the motor head into the material to make the cut.
- Raise the motor head.
- Turn the on/off switch to the **OFF** position.
- Turn the flow adjustment valve to the **OFF** position.
- Slide the table away from the motor head and position the work material for the next cut.

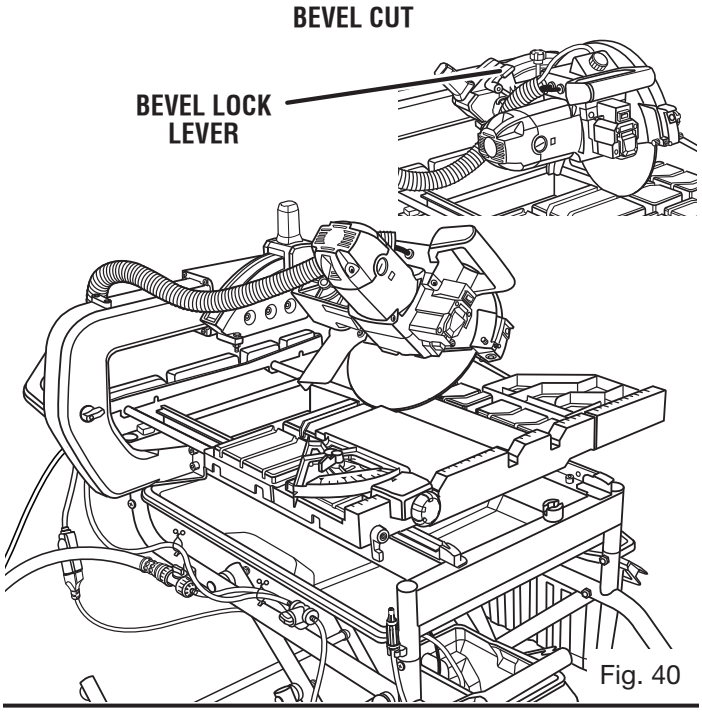

Fig. 40

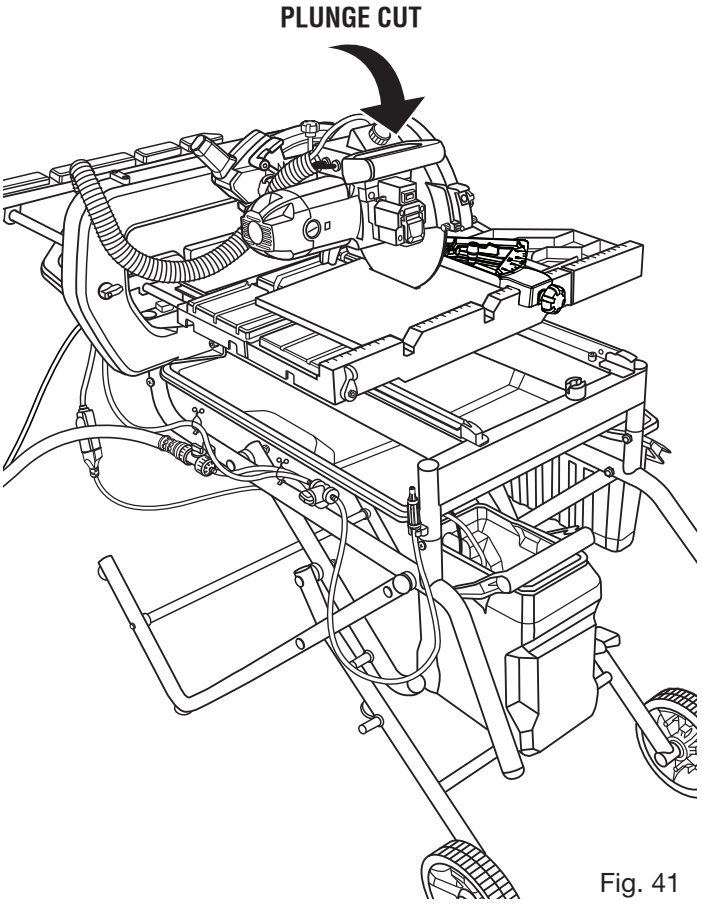

Fig. 41

WARNING:
Before performing any adjustment, make sure the tool is unplugged from the power supply and the switch is in the OFF position. Failure to heed this warning could result in serious personal injury.

The saw has been adjusted at the factory for making very accurate cuts. However, some of the components might have been jarred out of alignment during shipping. Also, over a period of time, readjustment will probably become necessary due to wear.

Do not start any adjustments until you have checked with a square and made test cuts to be sure adjustments are needed.

TO SQUARE THE CUTTING WHEEL TO THE TABLE

See Figure 42.

Do not loosen any screws for this adjustment until you have checked with a square and made test cuts to be sure adjustments are necessary. Once the screws are loosened, these items must be reset.

- Unplug the saw.
- Remove the water tray.
- Using a hex key, loosen hex bolts on the left and right rails.
- Place a framing square against the fence and the flat part of the wheel.
- Using set screws to adjust, move both rails at the same time until the fence is square with the cutting wheel.
- Tighten the hex bolts securely.

TO ADJUST TABLE ROLLERS

See Figure 43.

If the table doesn't slide smoothly, seems too loose on the rails, moves side to side, or is visibly off track adjustments may be required. Only adjust front and rear tables.

To adjust the upper table roller:

- Loosen set screw.
- Turn cam bolt to adjust roller up or down.

  NOTE: Only the front and rear rollers are adjustable. Do not attempt to adjust the center rollers.
- Once the rollers are touching the rail, tighten the set screw securely.

To adjust the lower table rollers:

- Loosen the cam bolt nut.
- Insert hex key through the hole in the left side of the table and adjust bolt as needed.
- Once the rollers are touching the rail, tighten the cam bolt nut securely. Repeat for each roller as required.

NOTE: Check that rollers are sliding properly after each adjustment.

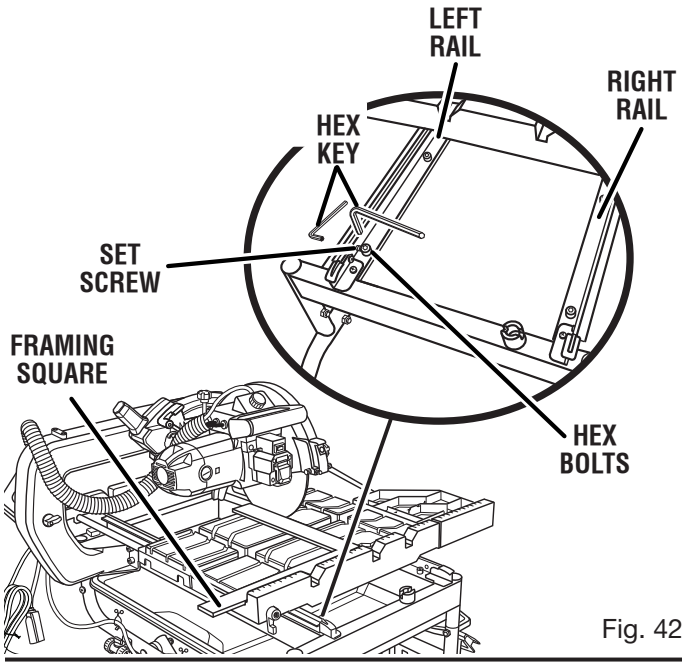

Fig. 42

ADJUSTING UPPER TABLE ROLLER

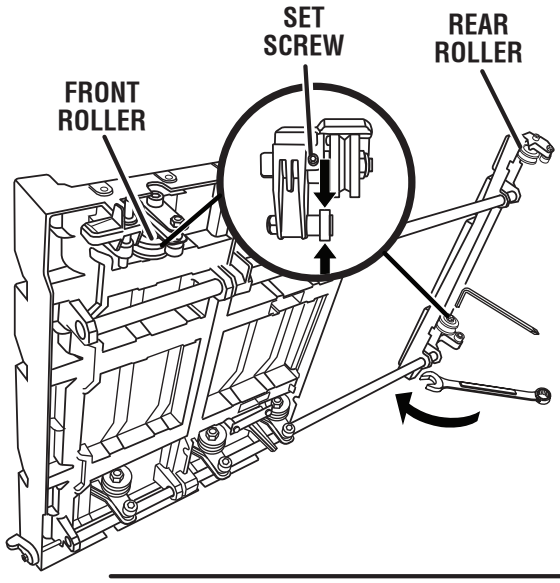

ADJUSTING LOWER TABLE ROLLERS

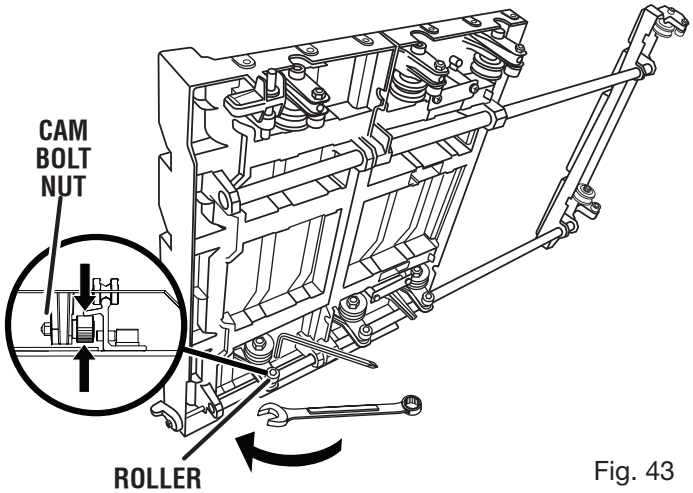

Fig. 43

POSITIVE STOP ADJUSTMENTS

See Figure 44.

NOTE: These adjustments were made at the factory and normally do not require readjustment.

- Unplug the saw.

If the cutting wheel is not perfectly vertical (0°):

- Loosen the bevel lock knob.
- Place a combination square beside the wheel.
- Using a wrench, turn the 0° hex bolt until the wheel is square to the table and the hex bolt is resting on the saw housing.
- Tighten the bevel lock knob.

If the cutting wheel is not an exact 45°:

- Set the saw arm to a 45° angle.
- Place a combination square beside the wheel and set the saw arm at 45°.
- Using a wrench, turn the 45° hex bolt until the hex bolt is resting on the saw housing.

After squaring adjustments have been made, it may be necessary to loosen the indicator screw on the bevel scale indicator and reset it to zero.

ANGLE ADJUSTMENT OF THE LASER GUIDE LINE

See Figure 45.

If the laser guide line is angled and not in alignment with the wheel, make the following adjustments:

- Using a phillips screwdriver, remove the cover screw.
- Turn the angle adjustment screw left or right as needed to place the laser guide line and wheel on the same path.
- Reinstall the cover screw.

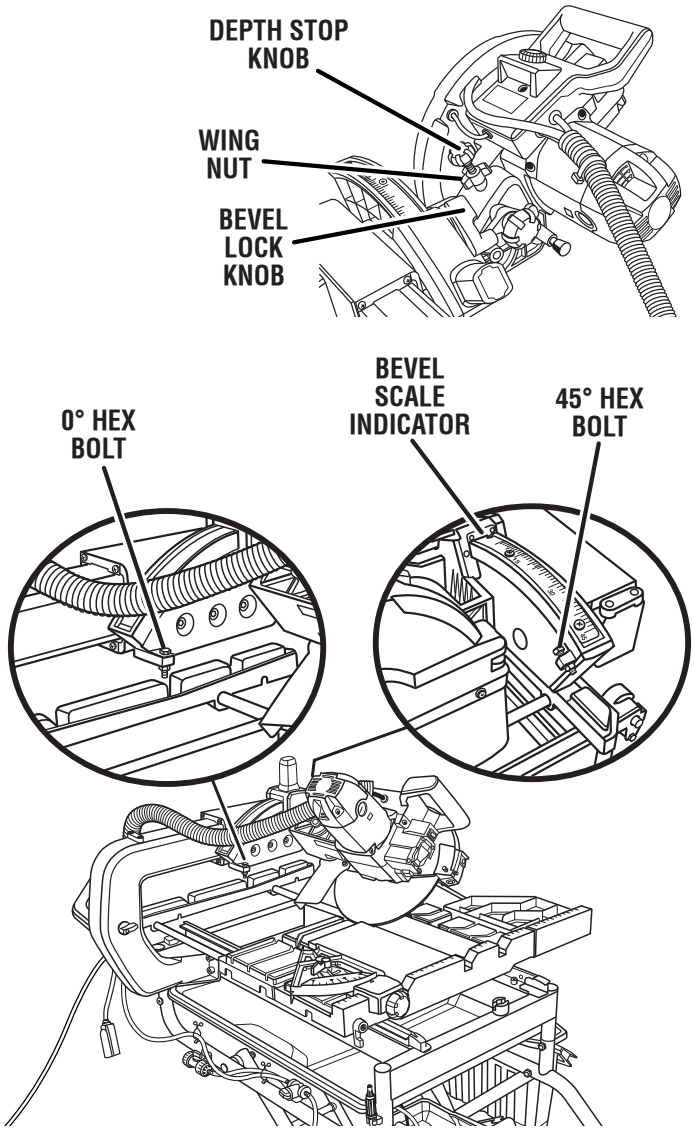

Fig. 44

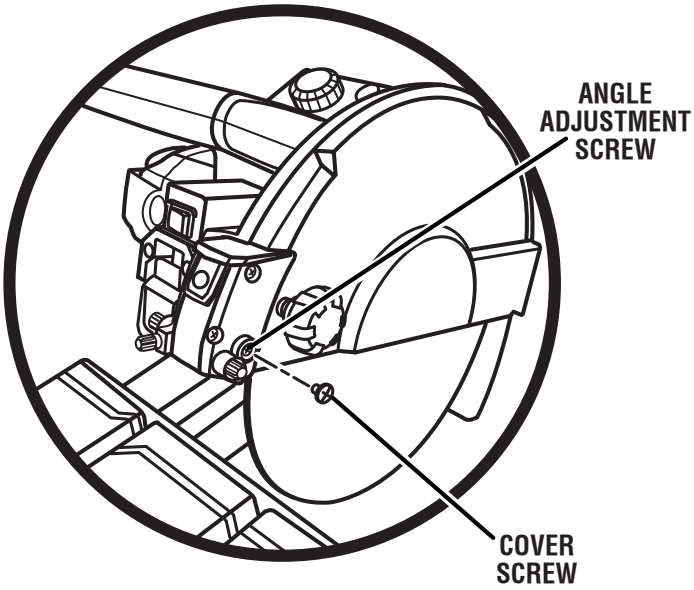

Fig. 45

WARNING:
When servicing, use only identical RIDGID replacement parts. Use of any other parts may create a hazard or cause product damage.

WARNING:
Always wear eye protection with side shields marked to comply with ANSI Z87.1 during product operation. If operation is dusty, also wear a dust mask.

GENERAL MAINTENANCE

Avoid using solvents when cleaning plastic parts. Most plastics are susceptible to damage from various types of commercial solvents and may be damaged by their use. Use clean cloths to remove dirt, dust, oil, grease, etc.

WARNING:
Do not at any time let brake fluids, gasoline, petroleum-based products, penetrating oils, etc., come in contact with plastic parts. Chemicals can damage, weaken or destroy plastic which may result in serious personal injury.

LUBRICATION

All of the bearings in this tool are lubricated with a sufficient amount of high grade lubricant for the life of the unit under normal operating conditions. After extended use, clean the rails so the table will slide smoothly. Lubricate with light oil (e.g., WD40).

BRUSH REPLACEMENT

See Figure 46.

The saw has externally accessible brush assemblies that should be periodically checked for wear.

Proceed as follows when replacement is required:

- Unplug the saw.
- Remove brush cap with a screwdriver. Brush assembly is spring loaded and will pop out when you remove brush cap.
- Remove brush assembly.
- Check for wear. Replace both brushes when either has less than 1/4 in. length of carbon remaining. **Do not** replace one side without replacing the other.
- Reassemble using new brush assemblies. Make sure curvature of brush matches curvature of motor and that brush moves freely in brush tube.
- Make sure brush cap is oriented correctly (straight) and replace.

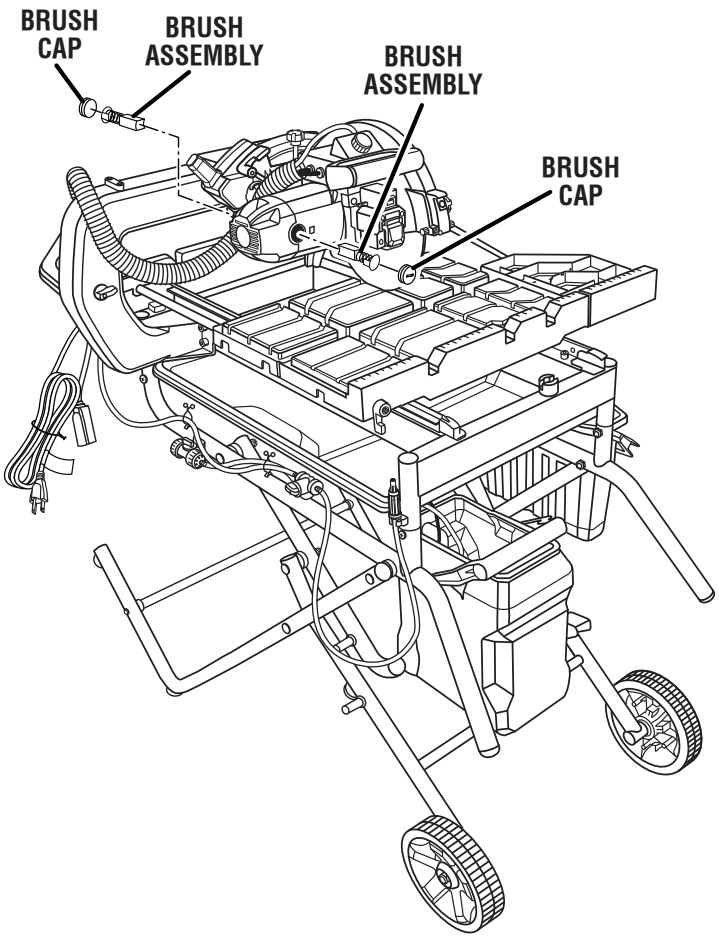

Fig. 46

- Tighten brush cap securely. **Do not** overtighten.

CLEANING THE RAILS

During use, the rails will become dirty preventing the table rollers from sliding smoothly. It is important to clean the rails often. Lubricate with light oil (e.g., WD40).

CLEANING THE SAW

See Figure 47.

- Unplug the saw and water pump.
- Empty the dirty water from the water tank and replace with clean water.
- Store the water tank on the center brace and place the submersible pump in the tank.
- Place the pump switch in the B position (see figure 26).
- With the diverter valve turned to the left, run the clean water through the saw flushing debris through the tubes and over the cutting wheel.
- Turn the diverter valve to the right. Using the cleaning nozzle, rinse off the sliding table.
- Unlock table stop (turning until the slot is vertical).
- Grasp the table firmly before pulling the table to the front and off the tool.
- Once the table has been removed, rinse the rails and water tray, water tray frame, and bevel feature. Lubricate with light oil (e.g., WD40).
- Replace the drain plug. Tighten securely.
- Empty dirty water from the water tank and dry off the tool.

CLEANING THE SUBMERSIBLE PUMP

- Unplug pump before handling or cleaning the pump.
- Remove the front cover.
- Using a small brush and/or water, clean any debris or trash that is trapped on the inside of the pump.

  NOTE: To maintain efficiency and extend the life of the pump, check intake screen before use to make sure it is clean.
- Rinse filter with clean water

If the pump will not run, try the following solutions:

- Ensure that the intake screen is free of obstructions.
- Make sure that the water hose isn't clogged or knotted.
- Be sure the unit is plugged into a functioning power outlet and the pump is plugged into the electrical plug.
- Be sure there is adequate water in the water tank and that the pump switch and variable flow valve are both turned on.

NOTE: Do not handle the pump while it is connected to a power source.

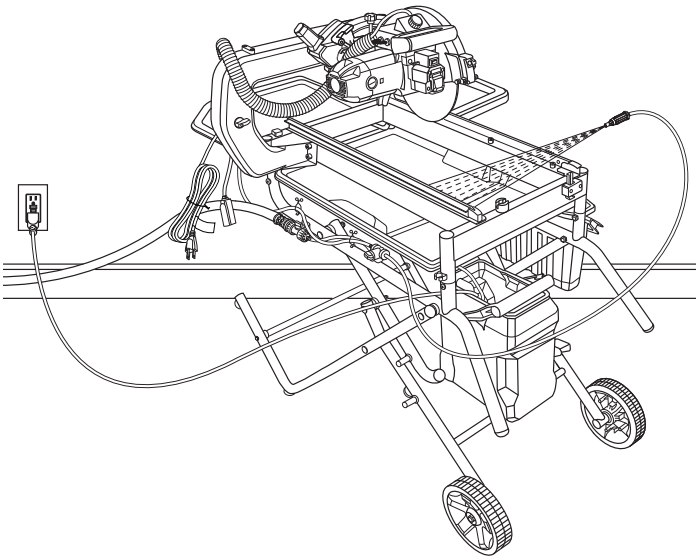

Fig. 47

WARRANTY

RIDGID® HAND HELD AND STATIONARY POWER TOOL 3 YEAR LIMITED SERVICE WARRANTY

Proof of purchase must be presented when requesting warranty service.

Limited to RIDGID® hand held and stationary power tools purchased 2/1/04 and after. This product is manufactured by One World Technologies, Inc. The trademark is licensed from RIDGID®, Inc. All warranty communications should be directed to One World Technologies, Inc., attn: RIDGID® Hand Held and Stationary Power Tool Technical Service at (toll free) 1-866-539-1710.

90-DAY SATISFACTION GUARANTEE POLICY

During the first 90 days after the date of purchase, if you are dissatisfied with the performance of this RIDGID® Hand Held and Stationary Power Tool for any reason you may return the tool to the dealer from which it was purchased for a full refund or exchange. To receive a replacement tool you must present proof of purchase and return all original equipment packaged with the original product. The replacement tool will be covered by the limited warranty for the balance of the 3 YEAR service warranty period.

WHAT IS COVERED UNDER THE 3 YEAR LIMITED SERVICE WARRANTY

This warranty on RIDGID® Hand Held and Stationary Power Tools covers all defects in workmanship or materials and normal wear items such as brushes, chucks, motors, switches, cords, gears and even cordless batteries in this RIDGID® tool for three years following the purchase date of the tool. Warranties for other RIDGID® products may vary.

HOW TO OBTAIN SERVICE

To obtain service for this RIDGID® tool you must return it; freight prepaid, or take it in to an authorized service center for RIDGID® branded hand held and stationary power tools. You may obtain the location of the authorized service center nearest you by calling (toll free) 1-866-539-1710 or by logging on to the RIDGID® website at www.ridgid.com. When requesting warranty service, you must present the original dated sales receipt. The authorized service center will repair any faulty workmanship, and either repair or replace any part covered under the warranty, at our option, at no charge to you.

WHAT IS NOT COVERED

This warranty applies only to the original purchaser at retail and may not be transferred. This warranty only covers defects arising under normal usage and does not cover any malfunction, failure or defect resulting from misuse, abuse, neglect, alteration, modification or repair by other than an authorized service center for RIDGID® branded hand held and stationary power tools. Consumable accessories provided with the tool such as, but not limited to, blades, bits and sand paper are not covered.

RIDGID®, INC. AND ONE WORLD TECHNOLOGIES, INC. MAKE NO WARRANTIES, REPRESENTATIONS OR PROMISES AS TO THE QUALITY OR PERFORMANCE OF ITS POWER TOOLS OTHER THAN THOSE SPECIFICALLY STATED IN THIS WARRANTY.

ADDITIONAL LIMITATIONS

To the extent permitted by applicable law, all implied warranties, including warranties of MERCHANTABILITY or FITNESS FOR A PARTICULAR PURPOSE, are disclaimed. Any implied warranties, including warranties of merchantability or fitness for a particular purpose, that cannot be disclaimed under state law are limited to three years from the date of purchase. One World Technologies, Inc. and RIDGID®, Inc. are not responsible for direct, indirect, incidental or consequential damages. Some states do not allow limitations on how long an implied warranty lasts and/or do not allow the exclusion or limitation of incidental or consequential damages, so the above limitations may not apply to you. This warranty gives you specific legal rights, and you may also have other rights which vary from state to state.

One World Technologies, Inc.
P.O. Box 35, Hwy. 8
Pickens, SC 29671